# 2007 Chevrolet Aveo Owner Manual


**Seats and Restraint Systems** ..... 7
- Front Seats ..... 8
- Rear Seats ..... 13
- Safety Belts ..... 19
- Child Restraints ..... 39
- Airbag System ..... 68
- Restraint System Check ..... 84

**Features and Controls** ..... 87
- Keys ..... 88
- Doors and Locks ..... 94
- Windows ..... 101
- Theft-Deterrent Systems ..... 103
- Starting and Operating Your Vehicle ..... 107
- Mirrors ..... 124
- Storage Areas ..... 126
- Sunroof ..... 128

**Instrument Panel** ..... 129
- Instrument Panel Overview ..... 132
- Climate Controls ..... 150
- Warning Lights, Gages, and Indicators ..... 157
- Secondary Information Center (SIC) ..... 175
- Audio System(s) ..... 186

**Driving Your Vehicle** ..... 219
- Your Driving, the Road, and Your Vehicle ..... 220
- Towing ..... 257

**Service and Appearance Care** ..... 261
- Service ..... 264
- Fuel ..... 266
- Checking Things Under the Hood ..... 273

Headlamp Aiming ..... 309
Bulb Replacement ..... 309
Windshield Wiper Blade Replacement .... 318
Tires ..... 319
Appearance Care ..... 345
Vehicle Identification ..... 354
Electrical System ..... 355
Capacities and Specifications ..... 368
Normal Maintenance
Replacement Parts ..... 369

**Maintenance Schedule** ..... 371
Maintenance Schedule ..... 372

**Customer Assistance Information** ..... 401
Customer Assistance and
Information ..... 402
Reporting Safety Defects ..... 419

**Index** ..... 423

GENERAL MOTORS, GM, the GM Emblem, CHEVROLET, the CHEVROLET Emblem, and the name AVEO are registered trademarks of General Motors Corporation.

This manual includes the latest information at the time it was printed. We reserve the right to make changes after that time without further notice. For vehicles first sold in Canada, substitute the name “General Motors of Canada Limited” for Chevrolet Motor Division whenever it appears in this manual.

This manual describes features that may be available in this model, but your vehicle may not be equipped with all of them. For example, more than one entertainment system may be offered or your vehicle may have been ordered without a front passenger or rear seats.

Keep this manual in the vehicle, so it will be there if it is needed while you are on the road. If the vehicle is sold, leave this manual in the vehicle.

## Canadian Owners

A French language copy of this manual can be obtained from your dealer or from:

Helm, Incorporated
P.O. Box 07130
Detroit, MI 48207

Litho in U.S.A.
Part No. 15876628 A First Printing

©2006 General Motors Corporation. All Rights Reserved.

## How to Use This Manual

Many people read the owner manual from beginning to end when they first receive their new vehicle. If this is done, it can help you learn about the features and controls for the vehicle. Pictures and words work together in the owner manual to explain things.

## Index

A good place to quickly locate information about the vehicle is the Index in the back of the manual. It is an alphabetical list of what is in the manual and the page number where it can be found.

## Safety Warnings and Symbols

There are a number of safety cautions in this book. We use a box and the word CAUTION to tell about things that could hurt you if you were to ignore the warning.

**⚠ CAUTION:**

**These mean there is something that could hurt you or other people.**

In the caution area, we tell you what the hazard is. Then we tell you what to do to help avoid or reduce the hazard. Please read these cautions. If you do not, you or others could be hurt.

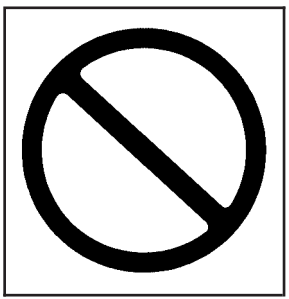

You will also find a circle with a slash through it in this book. This safety symbol means “Do Not,” “Do Not do this” or “Do Not let this happen.”

## Vehicle Damage Warnings

Also, in this manual you will find these notices:

***Notice:*** **These mean there is something that could damage your vehicle.**

A notice tells about something that can damage the vehicle. Many times, this damage would not be covered by your vehicle's warranty, and it could be costly. But the notice will tell what to do to help avoid the damage.

When you read other manuals, you might see CAUTION and NOTICE warnings in different colors or in different words.

There are also warning labels on the vehicle. They use the same words, CAUTION or NOTICE.

## Vehicle Symbols

The vehicle has components and labels that use symbols instead of text. Symbols are shown along with the text describing the operation or information relating to a specific component, control, message, gage, or indicator.

If you need help figuring out a specific name of a component, gage, or indicator, reference the following topics:

- Seats and Restraint Systems in Section 1
- Features and Controls in Section 2
- Instrument Panel Overview in Section 3
- Climate Controls in Section 3
- Warning Lights, Gages, and Indicators in Section 3
- Audio System(s) in Section 3
- Engine Compartment Overview in Section 5

These are some examples of symbols that may be found on the vehicle:

| | | | | | |
|---|---|---|---|---|---|
| CAUTION POSSIBLE INJURY | LATCH BOTH LAP AND SHOULDER BELTS TO PROTECT OCCUPANT DO NOT TWIST SAFETY BELT WHEN ATTACHING | | MASTER LIGHTING SWITCH | ENGINE COOLANT TEMP | TIRE PRESSURE |
| PROTECT EYES BY SHIELDING | FASTEN SEAT BELTS | AIRBAG | TURN SIGNALS | BATTERY CHARGING SYSTEM | FUSE BOX ACCESS |
| CAUSTIC BATTERY ACID COULD CAUSE BURNS | MOVE SEAT FULLY REARWARD SECURE CHILD SEAT | DO NOT INSTALL A REAR-FACING CHILD RESTRAINT IN THIS SEATING POSITION | PARKING LAMPS | BRAKE | ENGINE COOLANT FAN |
| AVOID SPARKS OR FLAMES | PULL BELT OUT COMPLETELY THEN SECURE CHILD SEAT | DO NOT INSTALL A FORWARD-FACING CHILD RESTRAINT IN THIS SEATING POSITION | HAZARD WARNING FLASHER | COOLANT | FUEL |
| SPARK OR FLAME COULD EXPLODE BATTERY | POWER WINDOW | DOOR LOCK UNLOCK | DAYTIME RUNNING LAMPS | ENGINE OIL PRESSURE | OWNER MANUAL |
| | | | FOG LAMPS | ANTI-LOCK BRAKE SYSTEM | SERVICE MANUAL |

# Section 1 Seats and Restraint Systems

**Front Seats** ..... 8
Manual Seats ..... 8
Driver Seat Height Adjuster ..... 9
Manual Lumbar (Sedan) ..... 9
Reclining Seatbacks ..... 10
Head Restraints ..... 12
**Rear Seats** ..... 13
Rear Seat Operation (Sedan) ..... 13
Rear Seat Operation (Hatchback) ..... 15
**Safety Belts** ..... 19
Safety Belts: They Are for Everyone ..... 19
Questions and Answers About Safety Belts .... 23
How to Wear Safety Belts Properly ..... 24
Driver Position ..... 25
Shoulder Belt Height Adjustment ..... 32
Safety Belt Use During Pregnancy ..... 33
Right Front Passenger Position ..... 33
Rear Seat Passengers ..... 34
Center Rear Passenger Position ..... 37
Safety Belt Pretensioners ..... 38
Safety Belt Extender ..... 38
**Child Restraints** ..... 39
Older Children ..... 39
Infants and Young Children ..... 42
Child Restraint Systems ..... 45
Where to Put the Restraint ..... 50
Lower Anchors and Tethers for Children (LATCH) ..... 52
Securing a Child Restraint in a Rear Seat Position ..... 59
Securing a Child Restraint in the Right Front Seat Position ..... 62
**Airbag System** ..... 68
Where Are the Airbags? ..... 71
When Should an Airbag Inflate? ..... 73
What Makes an Airbag Inflate? ..... 75
How Does an Airbag Restrain? ..... 75
What Will You See After an Airbag Inflates? ..... 76
Passenger Sensing System ..... 77
Servicing Your Airbag-Equipped Vehicle ..... 82
Adding Equipment to Your Airbag-Equipped Vehicle ..... 83
**Restraint System Check** ..... 84
Checking the Restraint Systems ..... 84
Replacing Restraint System Parts After a Crash ..... 84

# Front Seats

## Manual Seats

**⚠ CAUTION:**

**You can lose control of the vehicle if you try to adjust a manual driver's seat while the vehicle is moving. The sudden movement could startle and confuse you, or make you push a pedal when you do not want to. Adjust the driver's seat only when the vehicle is not moving.**

Pull up and hold the bar located under the front of the seat to unlock it.

Slide the seat to where you want it and release the bar. Then try to move the seat with your body, to make sure the seat is locked into place.

## Driver Seat Height Adjuster

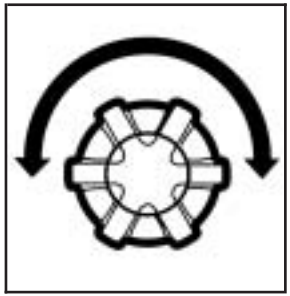

To adjust the height of the driver's seat cushion, turn the knob located on the outboard side of the seat cushion.

Turn the knob forward to raise the height of the seat cushion and rearward to lower it.

## Manual Lumbar (Sedan)

Your vehicle may have manually operated lumbar support for the driver's seat.

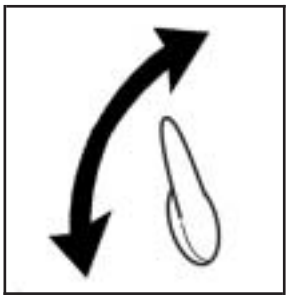

To adjust the front seat lumbar support, use the lever located on the outboard side of the seatback.

Push the lever down to adjust the support for the lower part of the seatback. Pull the lever up to return the support to its original position.

## Reclining Seatbacks

**⚠ CAUTION:**

**You can lose control of the vehicle if you try to adjust a manual driver's seat while the vehicle is moving. The sudden movement could startle and confuse you, or make you push a pedal when you do not want to. Adjust the driver's seat only when the vehicle is not moving.**

**⚠ CAUTION:**

**If the seatback is not locked, it could move forward in a sudden stop or crash. That could cause injury to the person sitting there. Always push and pull on the seatback to be sure it is locked.**

Your seats have manual reclining seatbacks. The lever used to operate them is located on the outboard side of the seats.

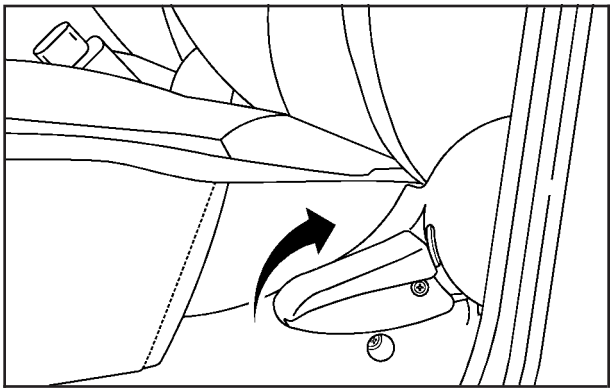

To recline the seatback, do the following:

1. Lift the recline lever.
2. Move the seatback to the desired position, then release the lever to lock the seatback in place.
3. Push and pull on the seatback to make sure it is locked.

To return the seatback to an upright position, do the following:

1. Lift the lever fully without applying pressure to the seatback and the seatback will return to the upright position.
2. Push and pull on the seatback to make sure it is locked.

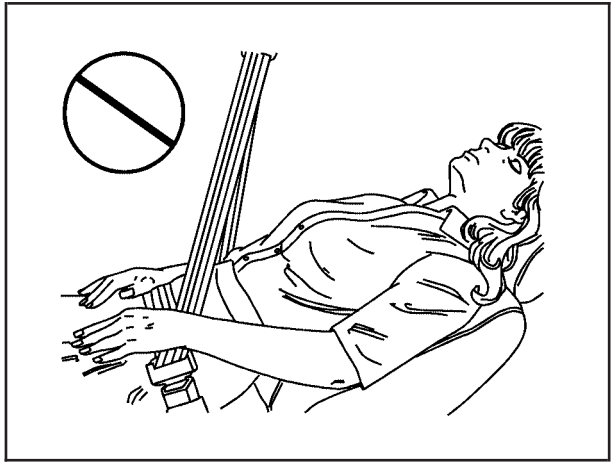

## ⚠ CAUTION:

**Sitting in a reclined position when your vehicle is in motion can be dangerous. Even if you buckle up, your safety belts cannot do their job when you are reclined like this.**

**The shoulder belt cannot do its job because it will not be against your body. Instead, it will be in front of you. In a crash, you could go into it, receiving neck or other injuries.**

**The lap belt cannot do its job either. In a crash, the belt could go up over your abdomen. The belt forces would be there, not at your pelvic bones. This could cause serious internal injuries.**

**For proper protection when the vehicle is in motion, have the seatback upright. Then sit well back in the seat and wear your safety belt properly.**

Do not have a seatback reclined if your vehicle is moving.

## Head Restraints

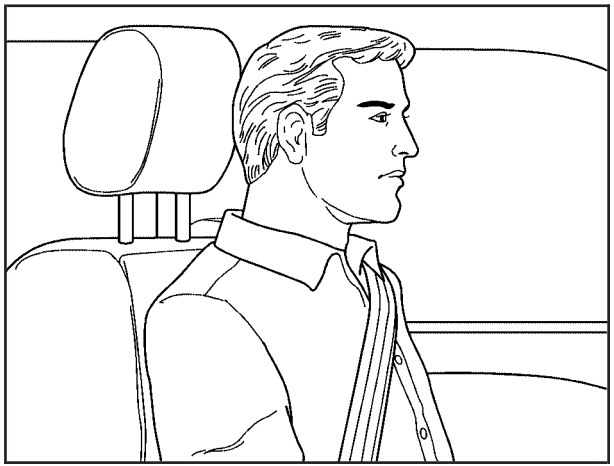

Adjust the head restraint so that the top of the restraint is at the same height as the top of the occupant's head. This position reduces the chances of a neck injury in a crash.

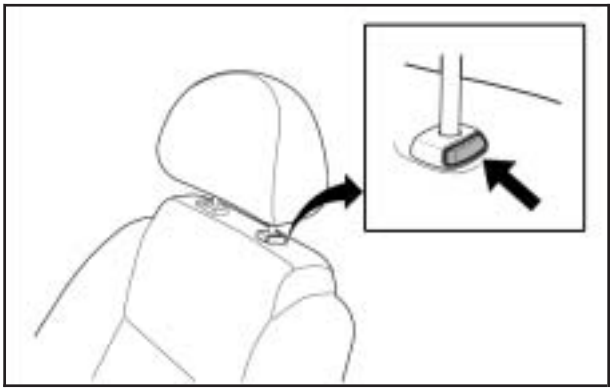

Pull the head restraint up to raise it. To lower it, press the button, located on the top of the seatback, and push the head restraint down.

The front seat head restraints also tilt forward. To tilt the head restraint, first put it in the upright position by tilting it forward fully and releasing it. Then slowly move the head restraint forward until it is in the desired position.

The front head restraints can also be removed. To remove the restraint, press the button located on the top of the seatback, and lift the head restraint from the guide sleeve. Replace the head restraint before driving.

The rear seats have head restraints that are adjustable up and down, but they do not tilt.

# Rear Seats

## Rear Seat Operation (Sedan)

### Folding the Seatback

The rear seatbacks can be folded down to increase cargo space.

To fold down the seatback, do the following:

***Notice:*** **Folding a rear seat with the safety belts still fastened may cause damage to the seat or the safety belts. Always unbuckle the safety belts and return them to their normal stowed position before folding a rear seat.**

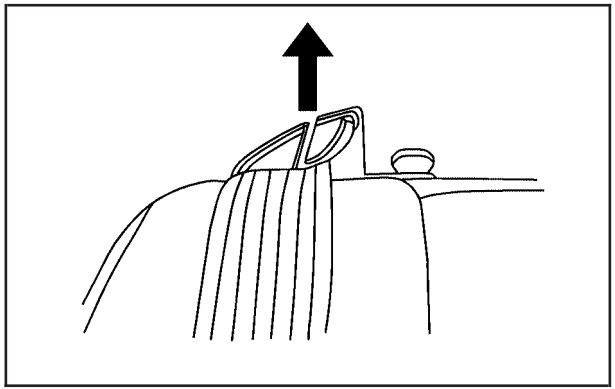

1. Remove the safety belt strap from the safety belt guide by pulling it through the slot.
2. Push the head restraints all the way down.

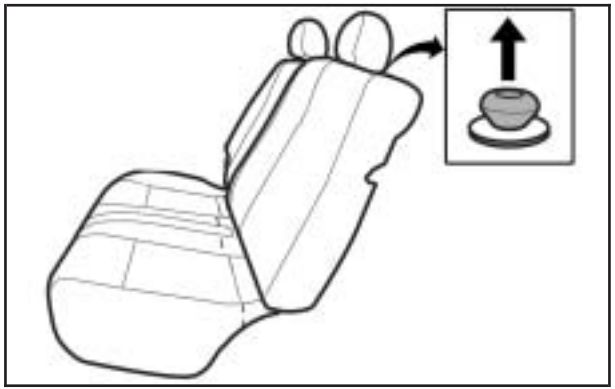

3. Pull up the release knob located on top of the rear seatback.
4. Fold the rear seatback forward and down.

To return the seatback to the upright position, do the following:

1. Hook the safety belts into the safety belt guide.
2. Lift the seatback up and push it to its original position.

**⚠ CAUTION:**

**If the seatback is not locked, it could move forward in a sudden stop or crash. That could cause injury to the person sitting there. Always push and pull on the seatback to be sure it is locked.**

3. Push down and rearward firmly on the top of the seatback until it latches securely in the fully upright position.

## ⚠ CAUTION:

**A safety belt that is improperly routed, not properly attached, or twisted will not provide the protection needed in a crash. The person wearing the belt could be seriously injured. After raising the rear seatback, always check to be sure that the safety belts are properly routed and attached, and are not twisted.**

4. Insert the safety belt strap back into the safety belt guide.

# Rear Seat Operation (Hatchback)

## Folding the Rear Seats

The rear seats can be folded to increase cargo space.

To fold the rear seats, do the following:

1. Lower the head restraints completely.
2. Detach the center safety belt from the mini buckle by pressing the black release button on the buckle.

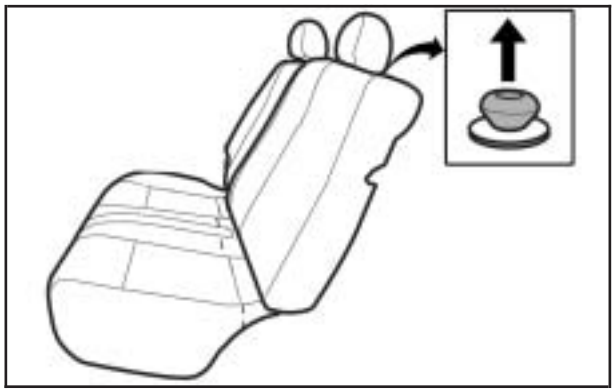

3. Pull up the release knob, located on the top of the seatback, and fold the seatback forward and down.

***Notice:*** **Folding a rear seat with the safety belts still fastened may cause damage to the seat or the safety belts. Always unbuckle the safety belts and return them to their normal stowed position before folding a rear seat.**

4. Move the safety belt buckles and safety belt in the center seating position out of the space between the seatback and the seat cushion so they are not in the way as the seat is being folded.

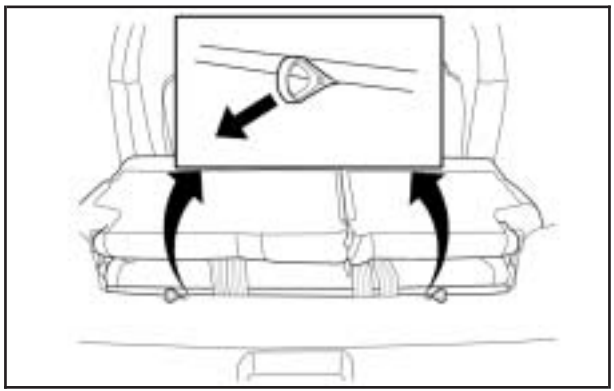

5. Pull the release handles on the rear side of the seat cushion to unlock the seat cushion.

6. Lift the seat cushion up and flip it forward.

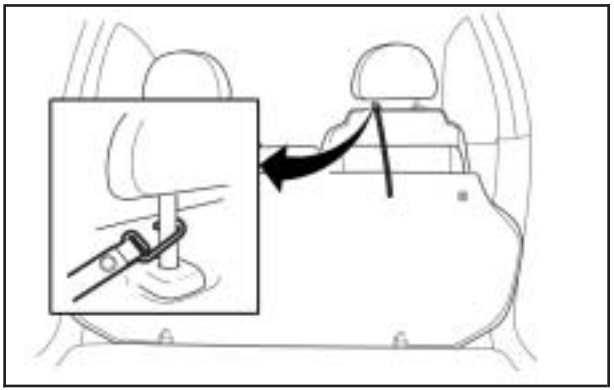

7. Clip the hook to the front seat head restraint to keep the rear seat secure.

8. When the rear seat is folded, store the safety belt buckles and center safety belt in the storage area under the floor mat.

## Unfolding the Seats

To return the rear seats to the normal seating position, do the following:

1. Unclip the hook from the front seat head restraint.
2. Remove the safety belt buckles and center seat safety belt from the storage area.

***Notice:*** **Damage to the safety belt buckle or rear seat locking mechanism can occur if the safety belt and buckles are pinched under the rear seat cushion. Do not place the safety belt and buckles on the floor under the rear seat cushion when the rear seat is put back to the sitting position.**

3. Push the seat cushion down to its original position until it latches securely. Try to pull up on the seat to make sure it is locked in place.

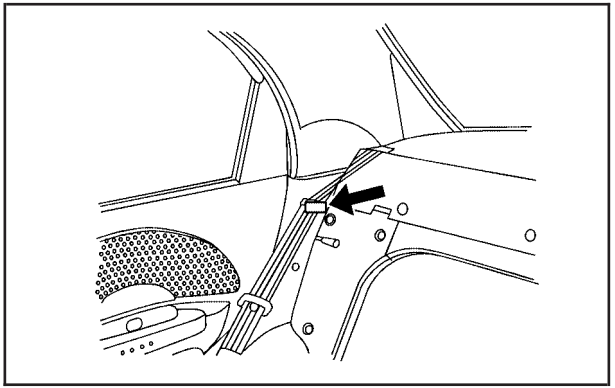

4. Hook the safety belts in the outboard seating positions into the retaining clips.

**⚠ CAUTION:**

**A safety belt that is improperly routed, not properly attached, or twisted will not provide the protection needed in a crash. The person wearing the belt could be seriously injured. After raising the rear seatback, always check to be sure that the safety belts are properly routed and attached, and are not twisted.**

5. Lift the seatback up and push it back to its original latched position.
6. Unhook the safety belts in the outboard seating positions from the retaining clips.
7. Return the safety belt buckles and the center seat safety belt to their original position between the rear seatback and the seat cushion. Make sure the straps of the safety belt and buckles are not twisted.
8. Reattach the center seat safety belt to the mini buckle. See *Center Rear Passenger Position on page 37*.

**⚠ CAUTION:**

**If the seatback is not locked, it could move forward in a sudden stop or crash. That could cause injury to the person sitting there. Always push and pull on the seatback to be sure it is locked.**

9. Push down and rearward firmly on the top of the seatback until it latches securely in the fully upright position.

# Safety Belts

## Safety Belts: They Are for Everyone

This part of the manual tells you how to use safety belts properly. It also tells you some things you should not do with safety belts.

**⚠ CAUTION:**

**Do not let anyone ride where he or she cannot wear a safety belt properly. If you are in a crash and you are not wearing a safety belt, your injuries can be much worse. You can hit things inside the vehicle or be ejected from it. You can be seriously injured or killed. In the same crash, you might not be, if you are buckled up. Always fasten your safety belt, and check that your passengers' belts are fastened properly too.**

**⚠ CAUTION:**

**It is extremely dangerous to ride in a cargo area, inside or outside of a vehicle. In a collision, people riding in these areas are more likely to be seriously injured or killed. Do not allow people to ride in any area of your vehicle that is not equipped with seats and safety belts. Be sure everyone in your vehicle is in a seat and using a safety belt properly.**

Your vehicle has a light that comes on as a reminder to buckle up. See *Safety Belt Reminder Light on page 176*.

In most states and in all Canadian provinces, the law says to wear safety belts. Here is why: *They work*.

You never know if you will be in a crash. If you do have a crash, you do not know if it will be a bad one.

A few crashes are mild, and some crashes can be so serious that even buckled up, a person would not survive. But most crashes are in between. In many of them, people who buckle up can survive and sometimes walk away. Without belts they could have been badly hurt or killed.

After more than 40 years of safety belts in vehicles, the facts are clear. In most crashes buckling up does matter... a lot!

## Why Safety Belts Work

When you ride in or on anything, you go as fast as it goes.

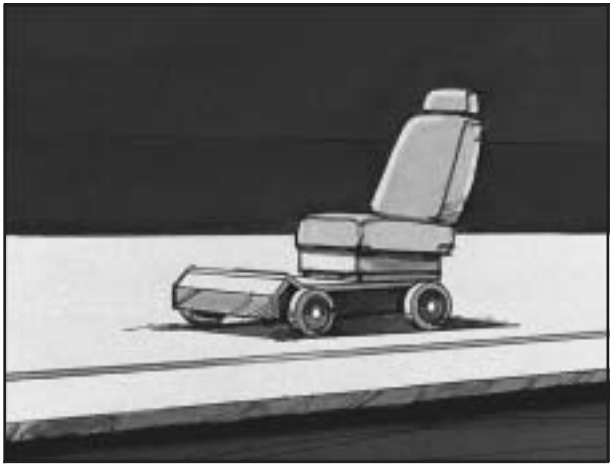

Take the simplest vehicle. Suppose it is just a seat on wheels.

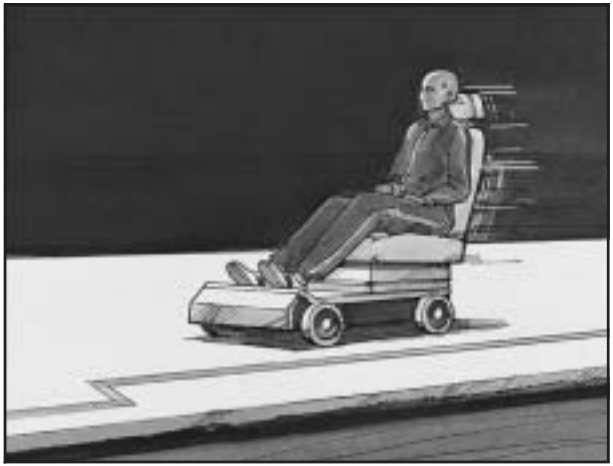

Put someone on it.

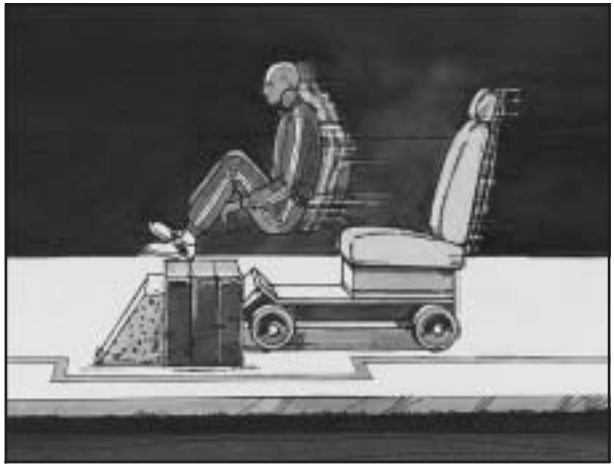

Get it up to speed. Then stop the vehicle. The rider does not stop.

The person keeps going until stopped by something. In a real vehicle, it could be the windshield...

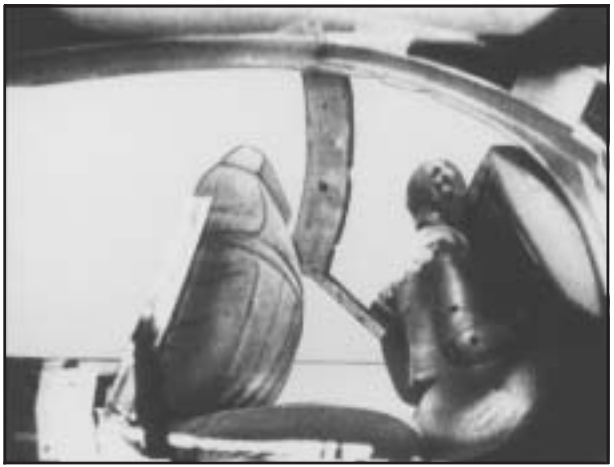

or the instrument panel...

or the safety belts!

With safety belts, you slow down as the vehicle does. You get more time to stop. You stop over more distance, and your strongest bones take the forces. That is why safety belts make such good sense.

## Questions and Answers About Safety Belts

**Q: Will I be trapped in the vehicle after an accident if I am wearing a safety belt?**

**A:** You *could* be — whether you are wearing a safety belt or not. But you can unbuckle a safety belt, even if you are upside down. And your chance of being conscious during and after an accident, so you *can* unbuckle and get out, is *much* greater if you are belted.

**Q: If my vehicle has airbags, why should I have to wear safety belts?**

**A:** Airbags are in many vehicles today and will be in most of them in the future. But they are supplemental systems only; so they work *with* safety belts — not instead of them. Every airbag system ever offered for sale has required the use of safety belts. Even if you are in a vehicle that has airbags, you still have to buckle up to get the most protection. That is true not only in frontal collisions, but especially in side and other collisions.

**Q: If I am a good driver, and I never drive far from home, why should I wear safety belts?**

**A:** You may be an excellent driver, but if you are in an accident — even one that is not your fault — you and your passengers can be hurt. Being a good driver does not protect you from things beyond your control, such as bad drivers.

Most accidents occur within 25 miles (40 km) of home. And the greatest number of serious injuries and deaths occur at speeds of less than 40 mph (65 km/h).

Safety belts are for everyone.

## How to Wear Safety Belts Properly

This part is only for people of adult size.

Be aware that there are special things to know about safety belts and children. And there are different rules for smaller children and babies. If a child will be riding in your vehicle, see *Older Children on page 39* or *Infants and Young Children on page 42*. Follow those rules for everyone's protection.

First, you will want to know which restraint systems your vehicle has.

We will start with the driver position.

# Driver Position

## Lap-Shoulder Belt

The driver has a lap-shoulder belt. Here is how to wear it properly.

1. Close and lock the door.
2. Adjust the seat so you can sit up straight. To see how, see “Seats” in the Index.

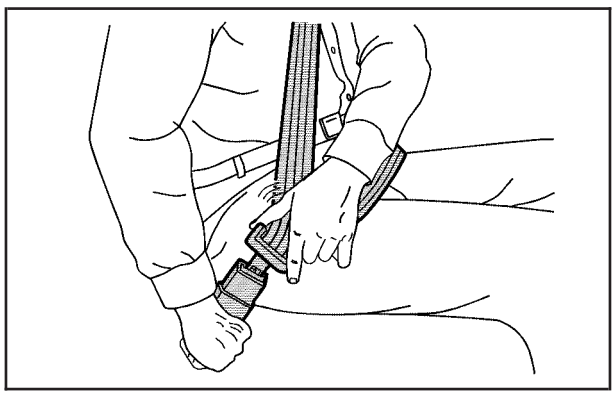

3. Pick up the latch plate and pull the belt across you. Do not let it get twisted.

   The lap-shoulder belt may lock if you pull the belt across you very quickly. If this happens, let the belt go back slightly to unlock it. Then pull the belt across you more slowly.

4. Push the latch plate into the buckle until it clicks.

   Pull up on the latch plate to make sure it is secure. If the belt is not long enough, see *Safety Belt Extender on page 38*.

   Make sure the release button on the buckle is positioned so you would be able to unbuckle the safety belt quickly if you ever had to.

5. Move the shoulder belt height adjuster to the height that is right for you. Improper shoulder belt height adjustment could reduce the effectiveness of the safety belt in a crash. See *Shoulder Belt Height Adjustment on page 32*.

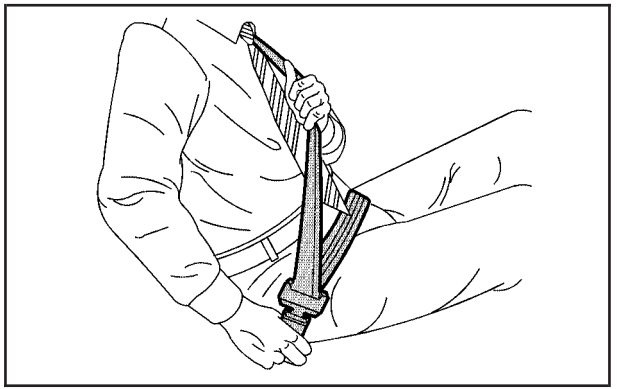

6. To make the lap part tight, pull up on the shoulder belt.

   It may be necessary to pull stitching on the safety belt through the latch plate to fully tighten the lap belt on smaller occupants.

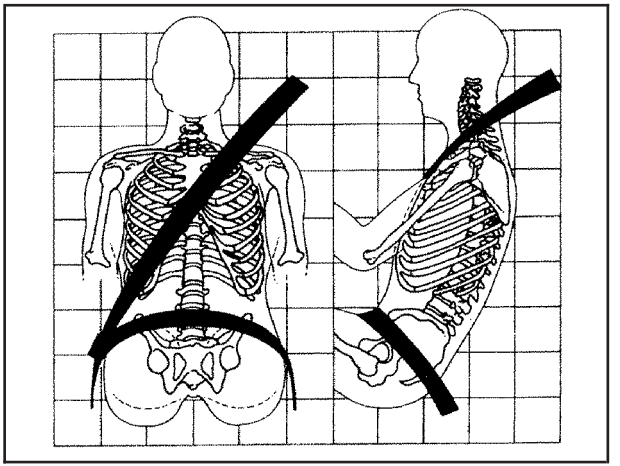

The lap part of the belt should be worn low and snug on the hips, just touching the thighs. In a crash, this applies force to the strong pelvic bones. And you would be less likely to slide under the lap belt. If you slid under it, the belt would apply force at your abdomen. This could cause serious or even fatal injuries. The shoulder belt should go over the shoulder and across the chest. These parts of the body are best able to take belt restraining forces.

The safety belt locks if there is a sudden stop or crash.

**Q: What is wrong with this?**

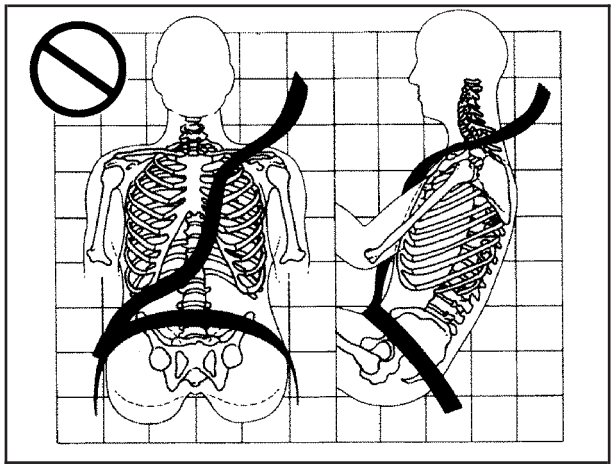

**A:** The shoulder belt is too loose. It will not give nearly as much protection this way.

## ⚠ CAUTION:

**You can be seriously hurt if your shoulder belt is too loose. In a crash, you would move forward too much, which could increase injury. The shoulder belt should fit against your body.**

**Q: What is wrong with this?**

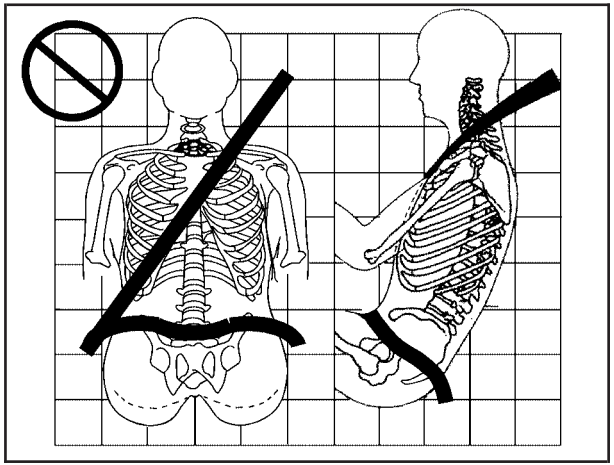

**A:** The lap belt is too loose. It will not give nearly as much protection this way.

## ⚠ CAUTION:

**You can be seriously hurt if your lap belt is too loose. In a crash, you could slide under the lap belt and apply force at your abdomen. This could cause serious or even fatal injuries. The lap belt should be worn low and snug on the hips, just touching the thighs.**

**Q: What is wrong with this?**

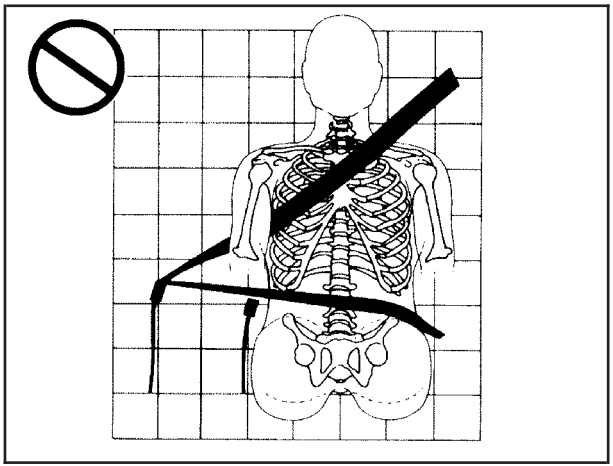

**A:** The belt is buckled in the wrong place.

## ⚠ CAUTION:

**You can be seriously injured if your belt is buckled in the wrong place like this. In a crash, the belt would go up over your abdomen. The belt forces would be there, not at the pelvic bones. This could cause serious internal injuries. Always buckle your belt into the buckle nearest you.**

**Q: What is wrong with this?**

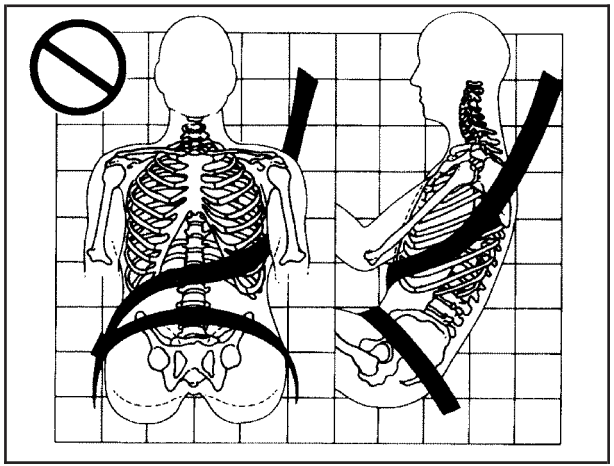

**A:** The shoulder belt is worn under the arm. It should be worn over the shoulder at all times.

## ⚠ CAUTION:

**You can be seriously injured if you wear the shoulder belt under your arm. In a crash, your body would move too far forward, which would increase the chance of head and neck injury. Also, the belt would apply too much force to the ribs, which are not as strong as shoulder bones. You could also severely injure internal organs like your liver or spleen.**

**Q: What is wrong with this?**

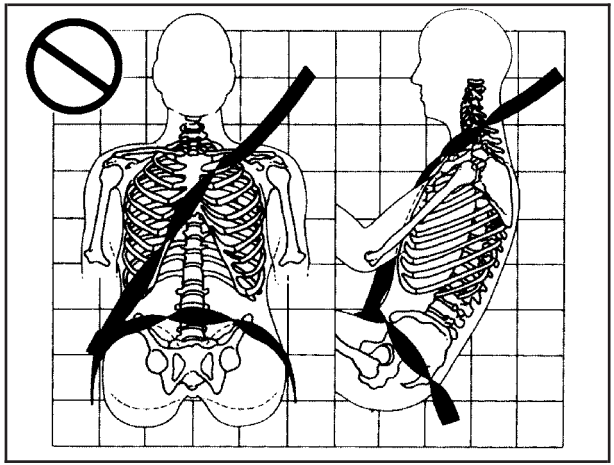

**A:** The belt is twisted across the body.

## ⚠ CAUTION:

**You can be seriously injured by a twisted belt. In a crash, you would not have the full width of the belt to spread impact forces. If a belt is twisted, make it straight so it can work properly, or ask your dealer to fix it.**

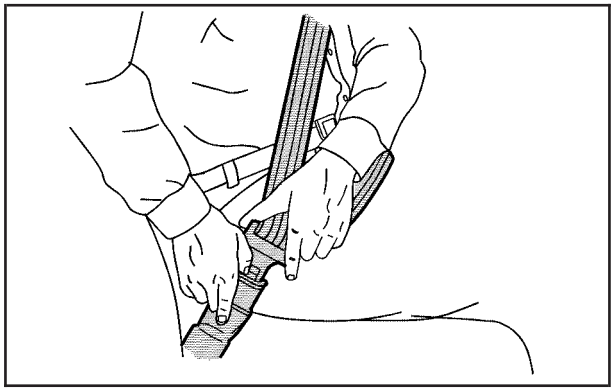

To unlatch the belt, push the button on the buckle. The belt should go back out of the way.

Before you close the door, be sure the belt is out of the way. If you slam the door on it, you can damage both the belt and your vehicle.

## Shoulder Belt Height Adjustment

Before you begin to drive, move the shoulder belt height adjuster to the height that is right for you.

Adjust the height so that the shoulder portion of the belt is centered on your shoulder. The belt should be away from your face and neck, but not falling off your shoulder. Incorrect positioning of the shoulder belt can reduce the effectiveness of the safety belt.

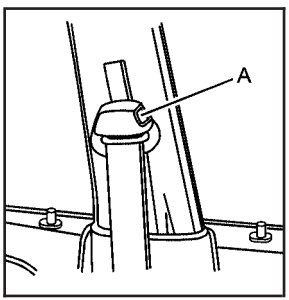


To move it down, press the release button (A) and move the height adjuster to the desired position.

After you move the height adjuster to where you want it, try to move it down without pressing the release button to make sure it has locked into position.

## Safety Belt Use During Pregnancy

Safety belts work for everyone, including pregnant women. Like all occupants, they are more likely to be seriously injured if they do not wear safety belts.

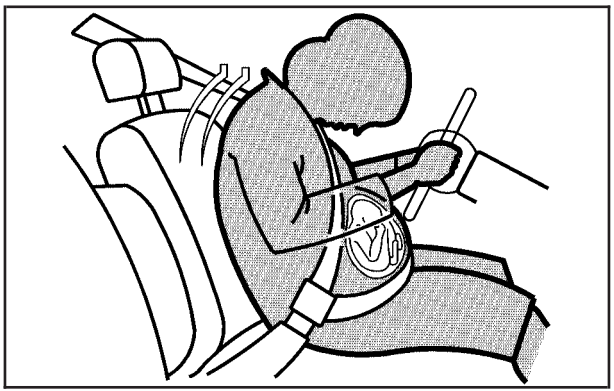

A pregnant woman should wear a lap-shoulder belt, and the lap portion should be worn as low as possible, below the rounding, throughout the pregnancy.

The best way to protect the fetus is to protect the mother. When a safety belt is worn properly, it is more likely that the fetus will not be hurt in a crash. For pregnant women, as for anyone, the key to making safety belts effective is wearing them properly.

## Right Front Passenger Position

To learn how to wear the right front passenger's safety belt properly, see *Driver Position on page 25*.

The right front passenger's safety belt works the same way as the driver's safety belt — except for one thing. If you ever pull the shoulder portion of the belt out all the way, you will engage the child restraint locking feature. If this happens, let the belt go back all the way and start again.

## Rear Seat Passengers

It is very important for rear seat passengers to buckle up! Accident statistics show that unbelted people in the rear seat are hurt more often in crashes than those who are wearing safety belts.

Rear passengers who are not safety belted can be thrown out of the vehicle in a crash. And they can strike others in the vehicle who are wearing safety belts.

## Rear Seat Outside Positions

### Lap-Shoulder Belt

The positions next to the windows have lap-shoulder belts. Here is how to wear a lap-shoulder belt properly.

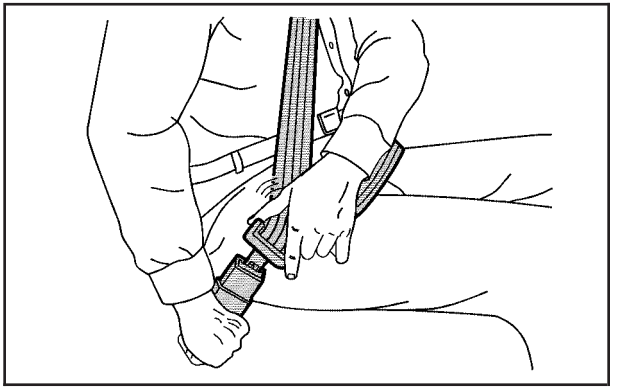

1. Pick up the latch plate and pull the belt across you. Do not let it get twisted.

   The shoulder belt may lock if you pull the belt across you very quickly. If this happens, let the belt go back slightly to unlock it. Then pull the belt across you more slowly.

2. Push the latch plate into the buckle until it clicks. Be sure you are using the correct buckle and that the latch plate clicks when inserted into the buckle.

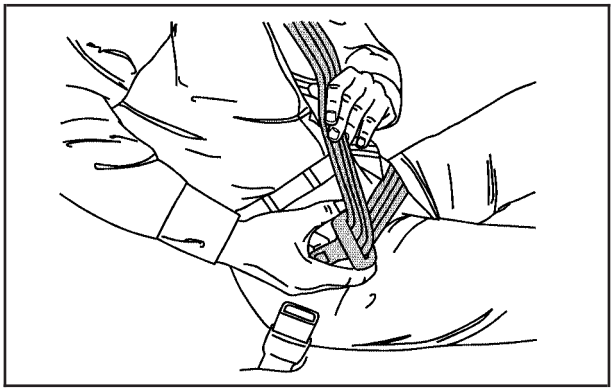

If the belt stops before it reaches the buckle, tilt the latch plate and keep pulling until you can buckle it.

Pull up on the latch plate to make sure it is secure.

Make sure the release button on the buckle is positioned so you would be able to unbuckle the safety belt quickly if you ever had to.

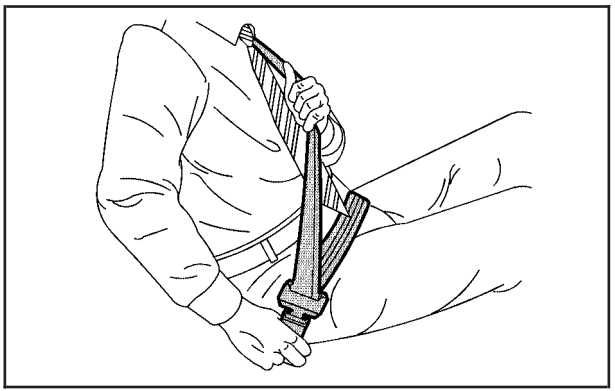

3. To make the lap part tight, pull down on the buckle end of the belt as you pull up on the shoulder part.

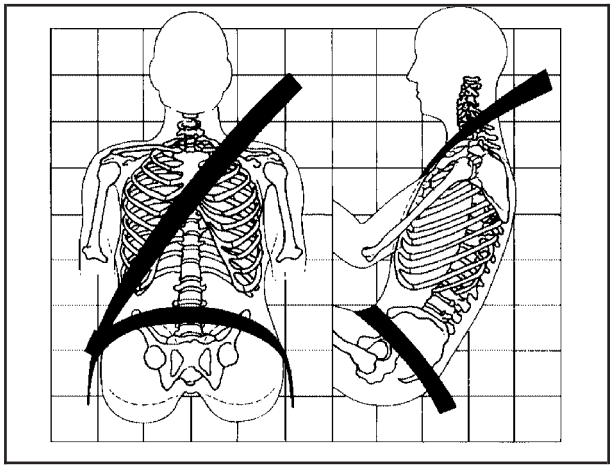

The lap part of the belt should be worn low and snug on the hips, just touching the thighs. In a crash this applies force to the strong pelvic bones. And you would be less likely to slide under the lap belt. If you slid under it, the belt would apply force at your abdomen. This could cause serious or even fatal injuries. The shoulder belt should go over the shoulder and across the chest. These parts of the body are best able to take belt restraining forces.

The safety belt locks if there is a sudden stop or a crash, or if you pull the belt very quickly out of the retractor.

**⚠ CAUTION:**

**You can be seriously hurt if your shoulder belt is too loose. In a crash, you would move forward too much, which could increase injury. The shoulder belt should fit against your body.**

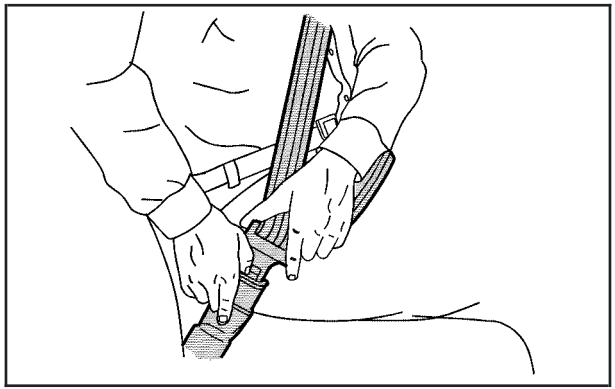

To unlatch the belt, just push the button on the buckle.

## Center Rear Passenger Position

Your vehicle has a retractable safety belt in the center rear seating position.

Here is how to use the center rear safety belt.

1. Pull the center rear safety belt from the retractor.
2. Push the latch plate at the end of the safety belt strap into the buckle with the black release button until the mechanism clicks. Make sure the strap is not twisted. The sliding latch plate will face the front of the vehicle.
3. Pick up the sliding latch plate and pull the belt across you. Do not let it get twisted.

   The shoulder belt may lock if you pull the belt across you very quickly. If this happens, let the belt go back slightly to unlock it. Then pull the belt across you more slowly.
4. Push the latch plate into the red buckle.

   If the belt stops before it reaches the buckle, tilt the latch plate and keep pulling until you can buckle it.

   Pull up on the latch plate to make sure it is secure.

   Make sure the release button on the buckle is positioned so you would be able to unbuckle the safety belt quickly if you ever had to.
5. To make the lap part tight, pull down the buckle end of the belt as you pull up on the shoulder part.

## Safety Belt Pretensioners

Your vehicle has safety belt pretensioners for the driver and right front passenger. Although you cannot see them, they are located on the retractor part of the safety belts. They help the safety belts reduce a person's forward movement in a moderate to severe frontal or near frontal crash.

Pretensioners work only once. If they activate in a crash, you will need to get new ones, and probably other new parts for your safety belt system. See *Replacing Restraint System Parts After a Crash on page 84*.

## Safety Belt Extender

If the vehicle's safety belt will fasten around you, you should use it.

But if a safety belt is not long enough, your dealer will order you an extender. When you go in to order it, take the heaviest coat you will wear, so the extender will be long enough for you. To help avoid personal injury, do not let someone else use it, and use it only for the seat it is made to fit. The extender has been designed for adults. Never use it for securing child seats. To wear it, just attach it to the regular safety belt. For more information see the instruction sheet that comes with the extender.

# Child Restraints

## Older Children

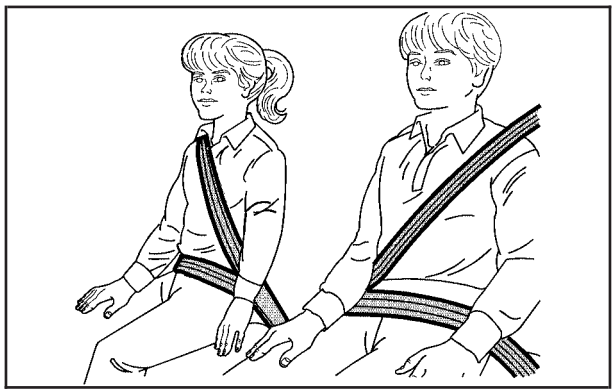

Older children who have outgrown booster seats should wear the vehicle's safety belts.

**Q: What is the proper way to wear safety belts?**

**A:** If possible, an older child should wear a lap-shoulder belt and get the additional restraint a shoulder belt can provide. The shoulder belt should not cross the face or neck. The lap belt should fit snugly below the hips, just touching the top of the thighs. It should never be worn over the abdomen, which could cause severe or even fatal internal injuries in a crash.

Accident statistics show that children are safer if they are restrained in the rear seat.

In a crash, children who are not buckled up can strike other people who are buckled up, or can be thrown out of the vehicle. Older children need to use safety belts properly.

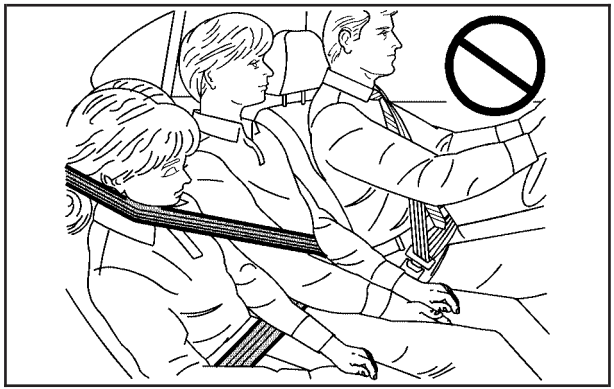

## ⚠ CAUTION:

**Never do this.**

**Here two children are wearing the same belt. The belt can not properly spread the impact forces. In a crash, the two children can be crushed together and seriously injured. A belt must be used by only one person at a time.**

**Q: What if a child is wearing a lap-shoulder belt, but the child is so small that the shoulder belt is very close to the child's face or neck?**

**A:** If the child is sitting in a seat next to a window, move the child toward the center of the vehicle. If the child is sitting in the center rear seat passenger position, move the child toward the safety belt buckle. In either case, be sure that the shoulder belt still is on the child's shoulder, so that in a crash the child's upper body would have the restraint that belts provide.

## ⚠ CAUTION:

**Never do this.**

**Here a child is sitting in a seat that has a lap-shoulder belt, but the shoulder part is behind the child. If the child wears the belt in this way, in a crash the child might slide under the belt. The belt's force would then be applied right on the child's abdomen. That could cause serious or fatal injuries.**

Wherever the child sits, the lap portion of the belt should be worn low and snug on the hips, just touching the child's thighs. This applies belt force to the child's pelvic bones in a crash.

## Infants and Young Children

Everyone in a vehicle needs protection! This includes infants and all other children. Neither the distance traveled nor the age and size of the traveler changes the need, for everyone, to use safety restraints. In fact, the law in every state in the United States and in every Canadian province says children up to some age must be restrained while in a vehicle.

**⚠ CAUTION:**

**Children can be seriously injured or strangled if a shoulder belt is wrapped around their neck and the safety belt continues to tighten. Never leave children unattended in a vehicle and never allow children to play with the safety belts.**

Every time infants and young children ride in vehicles, they should have the protection provided by appropriate restraints. Young children should not use the vehicle's adult safety belts alone, unless there is no other choice. Instead, they need to use a child restraint.

**⚠ CAUTION:**

**People should never hold a baby in their arms while riding in a vehicle. A baby does not weigh much — until a crash. During a crash a baby will become so heavy it is not possible to hold it.**
**For example, in a crash at only 25 mph (40 km/h), a 12 lb (5.5 kg) baby will suddenly become a 240 lb (110 kg) force on a person's arms. A baby should be secured in an appropriate restraint.**

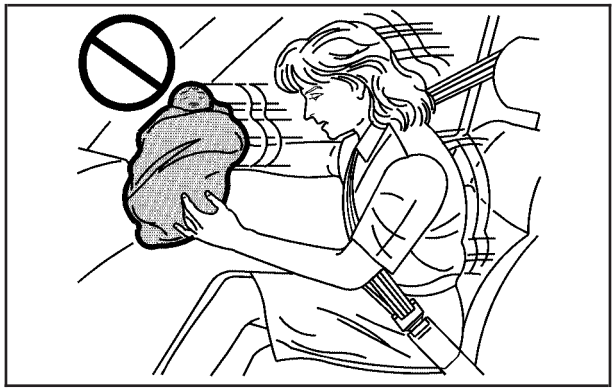

## ⚠ CAUTION:

**Children who are up against, or very close to, any airbag when it inflates can be seriously injured or killed. Airbags plus lap-shoulder belts offer protection for adults and older children, but not for**

**CAUTION: (Continued)**

## CAUTION: (Continued)

**young children and infants. Neither the vehicle's safety belt system nor its airbag system is designed for them. Young children and infants need the protection that a child restraint system can provide.**

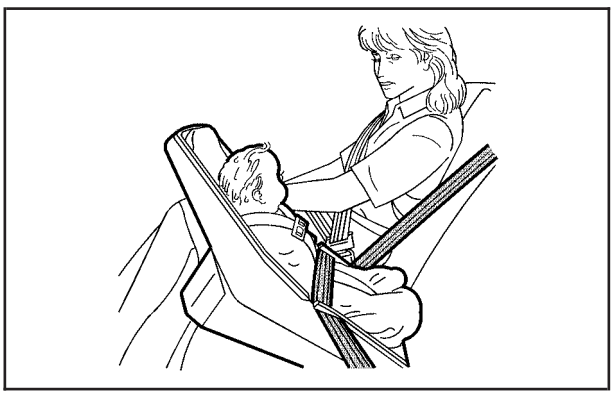

**Q: What are the different types of add-on child restraints?**

**A:** Add-on child restraints, which are purchased by the vehicle's owner, are available in four basic types. Selection of a particular restraint should take into consideration not only the child's weight, height, and age but also whether or not the restraint will be compatible with the motor vehicle in which it will be used.

For most basic types of child restraints, there are many different models available. When purchasing a child restraint, be sure it is designed to be used in a motor vehicle. If it is, the restraint will have a label saying that it meets federal motor vehicle safety standards.

The restraint manufacturer's instructions that come with the restraint state the weight and height limitations for a particular child restraint. In addition, there are many kinds of restraints available for children with special needs.

**⚠ CAUTION:**

**Newborn infants need complete support, including support for the head and neck. This is necessary because a newborn infant's neck is weak and its head weighs so much compared with the rest of its body. In a crash, an infant in a rear-facing seat settles into the restraint, so the crash forces can be distributed across the strongest part of an infant's body, the back and shoulders. Infants always should be secured in appropriate infant restraints.**

## ⚠ CAUTION:

**The body structure of a young child is quite unlike that of an adult or older child, for whom the safety belts are designed. A young child's hip bones are still so small that the vehicle's regular safety belt may not remain low on the hip bones, as it should. Instead, it may settle up around the child's abdomen. In a crash, the belt would apply force on a body area that is unprotected by any bony structure. This alone could cause serious or fatal injuries. Young children always should be secured in appropriate child restraints.**

## Child Restraint Systems

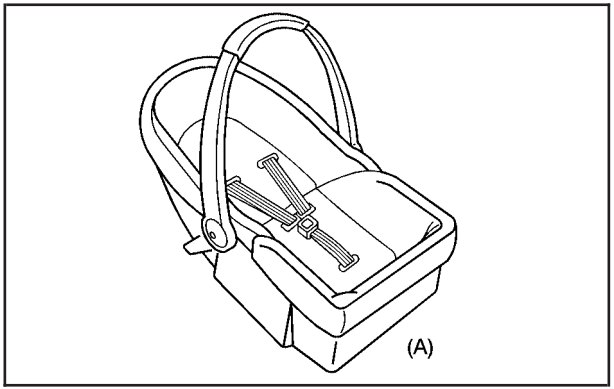


An infant car bed (A), a special bed made for use in a motor vehicle, is an infant restraint system designed to restrain or position a child on a continuous flat surface. Make sure that the infant's head rests toward the center of the vehicle.

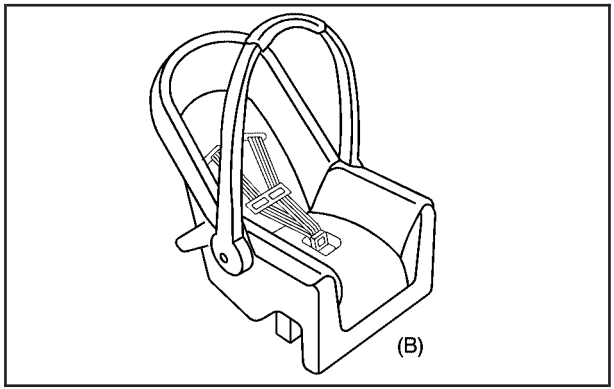


A rear-facing infant seat (B) provides restraint with the seating surface against the back of the infant. The harness system holds the infant in place and, in a crash, acts to keep the infant positioned in the restraint.

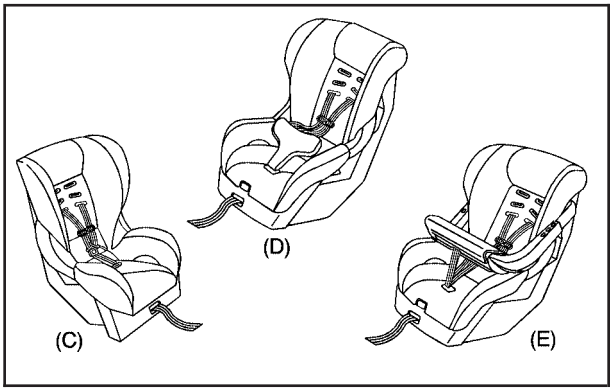


A forward-facing child seat (C-E) provides restraint for the child's body with the harness and also sometimes with surfaces such as T-shaped or shelf-like shields.

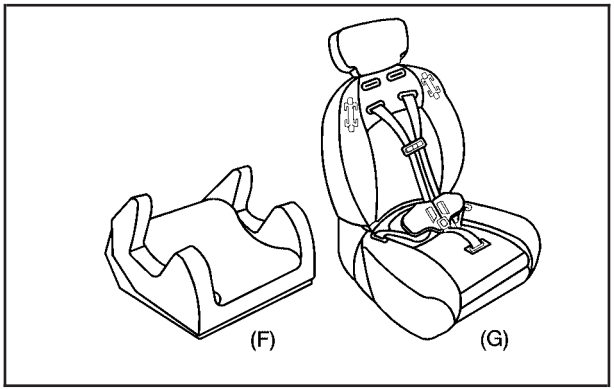


A booster seat (F-G) is a child restraint designed to improve the fit of the vehicle's safety belt system. Some booster seats have a shoulder belt positioner, and some high-back booster seats have a five-point harness. A booster seat can also help a child to see out the window.

**Q: How Should I Use a Child Restraint?**

**A:** A child restraint system is any device designed for use in a motor vehicle to restrain, seat, or position children. A built-in child restraint system is a permanent part of the motor vehicle. An add-on child restraint system is a portable one, which is purchased by the vehicle's owner. To help reduce injuries, an add-on child restraint must be secured in the vehicle. With built-in or add-on child restraints, the child has to be secured within the child restraint.

When choosing an add-on child restraint, be sure the child restraint is designed to be used in a vehicle. If it is, it will have a label saying that it meets federal motor vehicle safety standards. Then follow the instructions for the restraint. You may find these instructions on the restraint itself or in a booklet, or both.

## Securing an Add-on Child Restraint in the Vehicle

**⚠ CAUTION:**

**A child can be seriously injured or killed in a crash if the child restraint is not properly secured in the vehicle. Make sure the child restraint is properly installed in the vehicle using the vehicle's safety belt or LATCH system, following the instructions that came with that restraint, and also the instructions in this manual.**

To help reduce the chance of injury, the child restraint must be secured in the vehicle. Child restraint systems must be secured in vehicle seats by lap belts or the lap belt portion of a lap-shoulder belt, or by the LATCH system. See *Lower Anchors and Tethers for Children (LATCH) on page 52* for more information. A child can be endangered in a crash if the child restraint is not properly secured in the vehicle.

When securing an add-on child restraint, refer to the instructions that come with the restraint which may be on the restraint itself or in a booklet, or both, and to this manual. The child restraint instructions are important, so if they are not available, obtain a replacement copy from the manufacturer.

Keep in mind that an unsecured child restraint can move around in a collision or sudden stop and injure people in the vehicle. Be sure to properly secure any child restraint in your vehicle — even when no child is in it.

## Securing the Child Within the Child Restraint

There are several systems for securing the child within the child restraint. One system, the three-point harness, has straps that come down over each of the infant's shoulders and buckle together at the crotch. The five-point harness system has two shoulder straps, two hip straps, and a crotch strap. A shield may take the place of hip straps. A T-shaped shield has shoulder straps that are attached to a flat pad which rests low against the child's body. A shelf- or armrest-type shield has straps that are attached to a wide, shelf-like shield that swings up or to the side.

**⚠ CAUTION:**

**A child can be seriously injured or killed in a crash if the child is not properly secured in the child restraint. Make sure the child is properly secured, following the instructions that came with that restraint.**

Because there are different systems, it is important to refer to the instructions that come with the restraint. A child can be endangered in a crash if the child is not properly secured in the child restraint.

## Where to Put the Restraint

Accident statistics show that children are safer if they are restrained in the rear rather than the front seat. We, therefore, recommend that child restraints be secured in a rear seat, including an infant riding in a rear-facing infant seat, a child riding in a forward-facing child seat and an older child riding in a booster seat.

Your vehicle has a rear seat that will accommodate a rear-facing child restraint. A label on your sun visor says, “Never put a rear-facing child seat in the front.” This is because the risk to the rear-facing child is so great, if the airbag deploys.

**⚠ CAUTION:**

**A child in a rear-facing child restraint can be seriously injured or killed if the right front passenger’s airbag inflates. This is because the back of the rear-facing child restraint would be very close to the inflating airbag.**

**CAUTION: (Continued)**

**CAUTION: (Continued)**

**Even though the passenger sensing system is designed to turn off the passenger’s frontal airbag and side impact airbag (if equipped) if the system detects a rear-facing child restraint, no system is fail-safe, and no one can guarantee that an airbag will not deploy under some unusual circumstance, even though it is turned off. We recommend that rear-facing child restraints be secured in the rear seat, even if the airbag or airbags are off.**

**If you need to secure a forward-facing child restraint in the right front seat, always move the front passenger seat as far back as it will go. It is better to secure the child restraint in a rear seat.**

There are a couple of things you need to know about using child restraints in your rear seat:

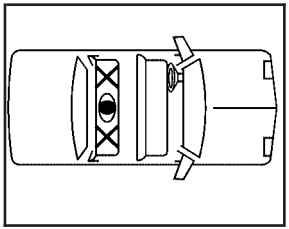

If you use a child restraint in the center rear seating position, the safety belts and the child restraint LATCH anchors for the rear outside seating positions will not be accessible.

Therefore, you will not be able to secure child restraints or have passengers ride in the rear outside seating positions.

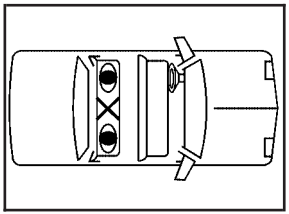

If you use two child restraints in the rear outside seating positions, the safety belt for the center rear seat position will not be accessible.

Therefore, you will not be able to secure a child restraint or have a passenger ride in the center rear seating position.

Wherever you install a child restraint, be sure to secure the child restraint properly.

Keep in mind that an unsecured child restraint can move around in a collision or sudden stop and injure people in the vehicle. Be sure to properly secure any child restraint in your vehicle — even when no child is in it.

## Lower Anchors and Tethers for Children (LATCH)

The LATCH system holds a child restraint during driving or in a crash. This system is designed to make installation of a child restraint easier. The LATCH system uses anchors in the vehicle and attachments on the child restraint that are made for use with the LATCH system

Make sure that a LATCH-compatible child restraint is properly installed using the anchors, or use the vehicle's safety belts to secure the restraint, following the instructions that came with that restraint, and also the instructions in this manual. When installing a child restraint with a top tether, you must also use either the lower anchors or the safety belts to properly secure the child restraint. A child restraint must never be installed using only the top tether and anchor.

In order to use the LATCH system in your vehicle, you need a child restraint that has LATCH attachments. The child restraint manufacturer will provide you with instructions on how to use the child restraint and its attachments. The following explains how to attach a child restraint with these attachments in your vehicle.

Not all vehicle seating positions or child restraints have lower anchors and attachments or top tether anchors and attachments.

### Lower Anchors

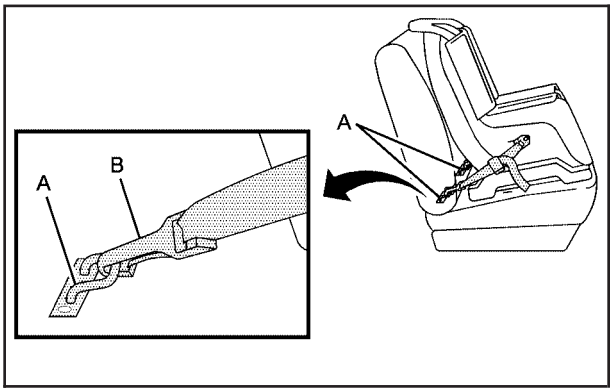


Lower anchors (A) are metal bars built into the vehicle. There are two lower anchors for each LATCH seating position that will accommodate a child restraint with lower attachments (B).

## Top Tether Anchor

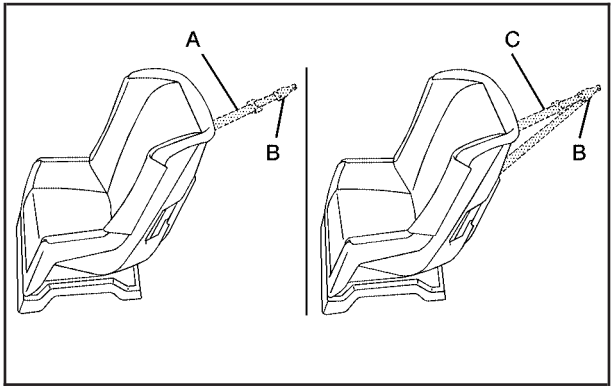


A top tether (A, C) anchors the top of the child restraint to the vehicle. A top tether anchor is built into the vehicle. The top tether attachment (B) on the child restraint connects to the top tether anchor in the vehicle in order to reduce the forward movement and rotation of the child restraint during driving or in a crash.

Your child restraint may have a single tether (A) or a dual tether (C). Either will have a single attachment (B) to secure the top tether to the anchor.

Some child restraints that have a top tether are designed for use with or without the top tether being attached. Others require the top tether always to be attached. In Canada, the law requires that forward-facing child restraints have a top tether, and that the tether be attached. In the United States, some child restraints also have a top tether. Be sure to read and follow the instructions for your child restraint.

If the child restraint does not have a top tether, one can be obtained, in kit form, for many child restraints. Ask the child restraint manufacturer whether or not a kit is available.

## Lower Anchor and Top Tether Anchor Locations

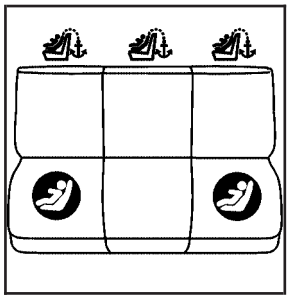

(Top Tether Anchor): Seating positions with top tether anchors.

(Lower Anchor): Seating positions with two lower anchors.

Each seating position with lower anchors has two labels, near the crease between the seatback and the seat cushion, showing where the anchors are located.

Hatchback models may have zippers over the lower anchor areas. If so, unzip the seat cover below the labels to access each lower anchor.

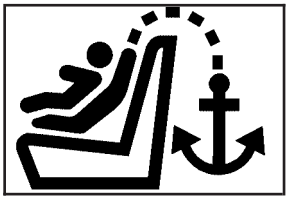

To assist you in locating the top tether anchors, the top tether anchor symbol is located on the trim cover.

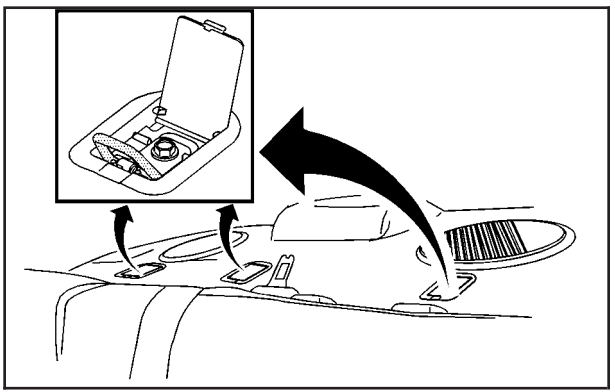

**Sedan**

For sedan models, the top tether anchors are located under the trim covers behind the rear seat on the filler panel. Pull open the cover to access the top tether anchors.

Be sure to use an anchor located on the same side of the vehicle as the seating position where the child restraint will be placed.

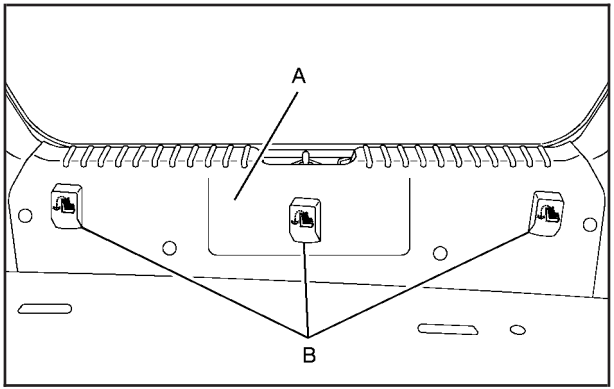


**Hatchback**

For hatchback models, the top tether anchors (B) are located in the rear cargo area, attached to the back wall (A) of the vehicle. Squeeze and pull the front part of the plastic cover to access the top tether anchors. Remove the cargo shade before installing the top tether.

The cargo shade should remain off while the top tether is in use. Be sure to use an anchor located on the same side of the vehicle as the seating position where the child restraint will be placed.

Do not secure a child restraint in the right front passenger's position if a national or local law requires that the top tether be attached, or if the instructions that come with the child restraint say that the top tether must be attached. There is no place to attach the top tether in this position.

Accident statistics show that children are safer if they are restrained in the rear rather than the front seat. See *Where to Put the Restraint on page 50* for additional information.

### Securing a Child Restraint Designed for the LATCH System

**⚠ CAUTION:**

**If a LATCH-type child restraint is not attached to anchors, the restraint will not be able to protect the child correctly. In a crash, the child could be seriously injured or killed. Make sure that a LATCH-type child restraint is properly installed using the anchors, or use the vehicle's safety belts to secure the restraint, following the instructions that came with that restraint, and also the instructions in this manual.**

**⚠ CAUTION:**

**Each top tether anchor and lower anchor in the vehicle is designed to hold only one child restraint. Attaching more than one child restraint to a single anchor could cause the anchor or attachment to come loose or even break during a crash.**
**A child or others could be injured if this happens. To help prevent injury to people and damage to your vehicle, attach only one child restraint per anchor.**

## ⚠ CAUTION:

**Children can be seriously injured or strangled if a shoulder belt is wrapped around their neck and the safety belt continues to tighten. Secure any unused safety belts behind the child restraint so children cannot reach them. Pull the shoulder belt all the way out of the retractor to set the lock, if your vehicle has one, after the child restraint has been installed. Be sure to follow the instructions of the child restraint manufacturer.**

***Notice:*** **Contact between the child restraint or the LATCH attachment parts and the vehicle's safety belt assembly may cause damage to these parts. Make sure when securing unused safety belts behind the child restraint that there is no contact between the child restraint or the LATCH attachment parts and the vehicle's safety belt assembly.**

**Folding an empty rear seat with the safety belts secured may cause damage to the safety belt or the seat. When removing the child restraint, always remember to return the safety belts to their normal, stowed position before folding the rear seat.**

1. Attach and tighten the lower attachments to the lower anchors. If the child restraint does not have lower attachments or the desired seating position does not have lower anchors, secure the child restraint with the top tether and the safety belts. Refer to your child restraint manufacturer instructions and the instructions in this manual.
   1.1. Find the lower anchors for the desired seating position.
   1.2. Put the child restraint on the seat.
   1.3. Attach and tighten the lower attachments on the child restraint to the lower anchors.

2. If the child restraint manufacturer recommends that the top tether be attached, attach and tighten the top tether to the top tether anchor, if equipped. Refer to the child restraint instructions and the following steps:
   2.1. Find the top tether anchor.
   2.2. Flip the cover to access the top tether anchors.
   2.3. For hatchback models, remove the cargo shade before installing the top tether. The cargo shade should remain off while the top tether is in use.
   2.4. Raise the head restraint if the desired seating position has an adjustable head restraint. See *Head Restraints on page 12*.
   2.5. Route and tighten the top tether according to your child restraint instructions and the following instructions:

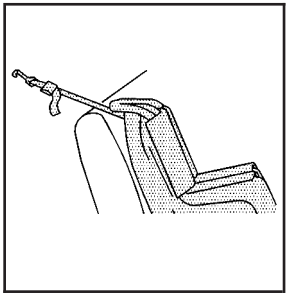

If the position you are using does not have a head restraint and you are using a single tether, route the tether over the seatback.

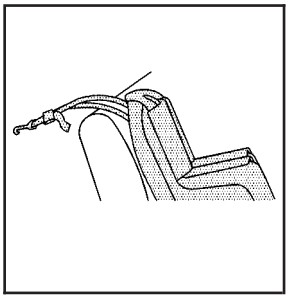

If the position you are using does not have a head restraint and you are using a dual tether, route the tether over the seatback.

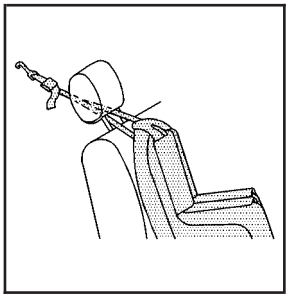

If the position you are using has a head restraint and you are using a dual tether, route the tether under the head restraint and in between the head restraint posts.

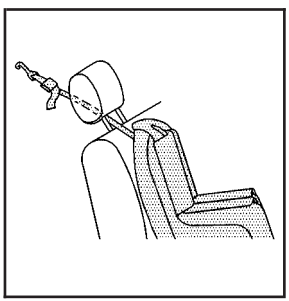

If the position you are using has an adjustable head restraint and you are using a single tether, route the tether under the head restraint and in between the head restraint posts.

3. Push and pull the child restraint in different directions to be sure it is secure.

## Securing a Child Restraint in a Rear Seat Position

If your child restraint is equipped with the LATCH system, see *Lower Anchors and Tethers for Children (LATCH) on page 52*.

If your child restraint does not have the LATCH system, you will be using the lap-shoulder belt to secure the child restraint. Be sure to follow the instructions that came with the child restraint. Secure the child in the child restraint when and as the instructions say.

If you need to install more than one child restraint in the rear seat, be sure to read *Where to Put the Restraint on page 50*. There is not room for three child restraints in the rear seat, but you can install two child restraints, one in each rear outside seating position.

1. Put the child restraint on the seat.
2. Pick up the latch plate, and run the lap and shoulder portions of the vehicle's safety belt through or around the restraint. The child restraint instructions will show you how.

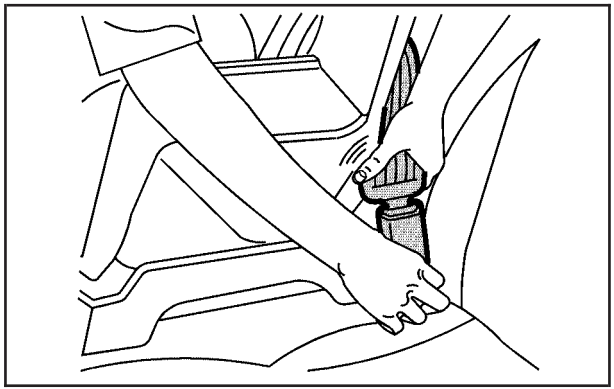

3. Buckle the belt. Be sure the latch plate clicks when you put it into the buckle. This means you are using the correct buckle. Also, make sure the release button is positioned so you would be able to unbuckle the safety belt quickly if you ever had to.

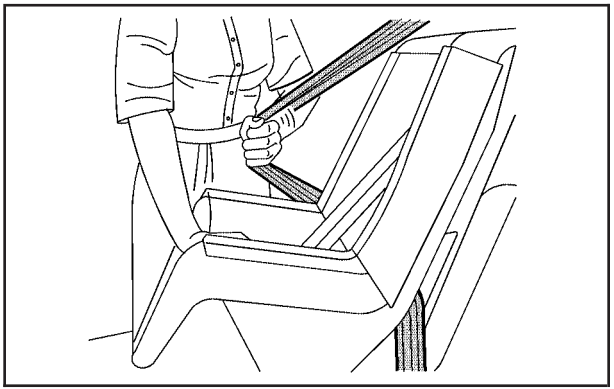

4. Pull the rest of the shoulder belt all the way out of the retractor to set the lock.

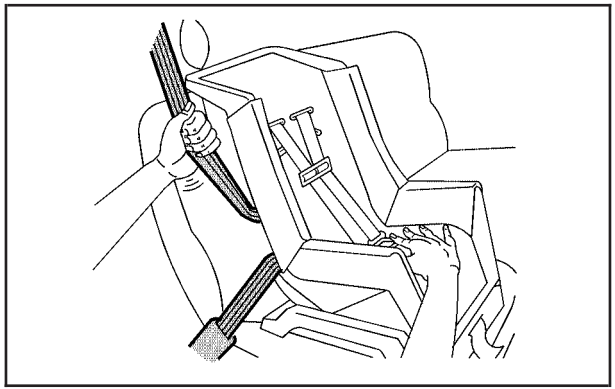

5. To tighten the belt, push down on the child restraint, pull the shoulder portion of the belt to tighten the lap portion of the belt and feed the shoulder belt back into the retractor. If you are using a forward-facing child restraint, you may find it helpful to use your knee to push down on the child restraint as you tighten the belt.
6. If your child restraint manufacturer recommends using a top tether, attach and tighten the top tether to the top tether anchor. Refer to the instructions that came with the child restraint and to *Lower Anchors and Tethers for Children (LATCH) on page 52*.
7. Push and pull the child restraint in different directions to be sure it is secure.

To remove the child restraint, if the top tether is attached to the top tether anchor, disconnect it. Unbuckle the vehicle's safety belt and let it go back all the way. The safety belt will move freely again and be ready to work for an adult or larger child passenger.

## Securing a Child Restraint in the Right Front Seat Position

Your vehicle has a right front passenger's airbag. A rear seat is a safer place to secure a forward-facing child restraint. See *Where to Put the Restraint on page 50*.

In addition, your vehicle has a passenger sensing system. The passenger sensing system is designed to turn off the right front passenger's frontal airbag and side airbag (if equipped) when an infant in a rear-facing infant seat or a small child in a forward-facing child restraint or booster seat is detected. See *Passenger Sensing System on page 77* and *Passenger Airbag Status Indicator on page 162* for more information on this including important safety information.

A label on your sun visor says, "Never put a rear-facing child seat in the front." This is because the risk to the rear-facing child is so great, if the airbag deploys.

**⚠ CAUTION:**

**A child in a rear-facing child restraint can be seriously injured or killed if the right front passenger's airbag inflates. This is because the back of the rear-facing child restraint would be very close to the inflating airbag.**

**CAUTION: (Continued)**

**CAUTION: (Continued)**

**Even though the passenger sensing system is designed to turn off the passenger's frontal airbag and side airbag (if equipped), if the system detects a rear-facing child restraint, no system is fail-safe, and no one can guarantee that an airbag or airbags will not deploy under some unusual circumstance, even though it is turned off. General Motors recommends that rear-facing child restraints be secured in the rear seat, even if the airbag or airbags are off.**

If you need to secure a forward-facing child restraint in the right front seat position, move the seat as far back as it will go before securing the forward-facing child restraint. See *Manual Seats on page 8*.

If your child restraint is equipped with the LATCH system, see *Lower Anchors and Tethers for Children (LATCH) on page 52*.

There is no top tether anchor in the right front passenger's position. Do not secure a child seat in this position if a national or local law requires that the top tether be anchored, or if the instructions that come with the child restraint say that the top tether must be anchored. See *Lower Anchors and Tethers for Children (LATCH) on page 52* if your child restraint has a top tether.

You will be using the lap-shoulder belt to secure the child restraint in this position. Be sure to follow the instructions that came with the child restraint. Secure the child in the child restraint when and as the instructions say.

1. Your vehicle has airbags. See *Passenger Sensing System on page 77*. General Motors recommends that rear-facing child restraints be secured in a rear seat, even if the right front passenger's frontal airbag and side airbag (if equipped) is off. If your child restraint is forward-facing, move the seat as far back as it will go before securing the child restraint in this seat. See *Manual Seats on page 8*.

   When the passenger sensing system has turned off the right front passenger's frontal airbag and side airbag (if equipped), the off symbol in the passenger airbag status indicator should light and stay lit when you turn the ignition to ON or START. See *Passenger Airbag Status Indicator on page 162*.

2. Put the child restraint on the seat.

3. Pick up the latch plate, and run the lap and shoulder portions of the vehicle's safety belt through or around the restraint. The child restraint instructions will show you how.

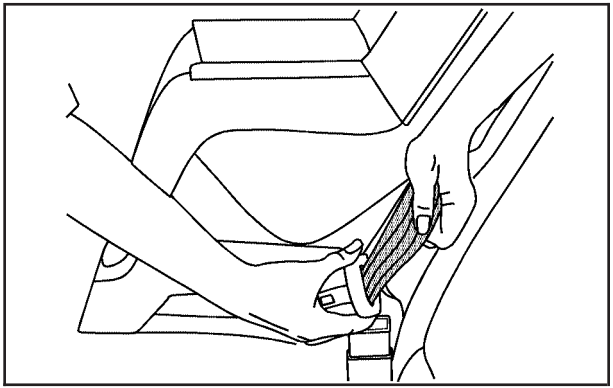

Tilt the latch plate to adjust the belt if needed.

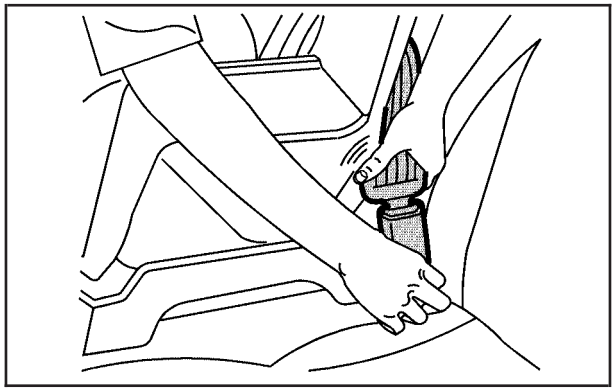

4. Buckle the belt. Make sure the release button is positioned so you would be able to unbuckle the safety belt quickly if you ever had to.

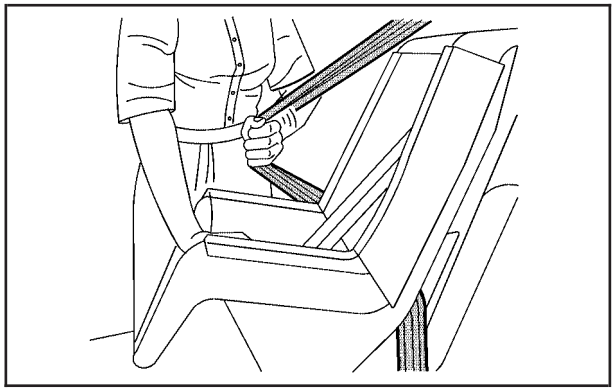

5. Pull the rest of the shoulder belt all the way out of the retractor to set the lock.

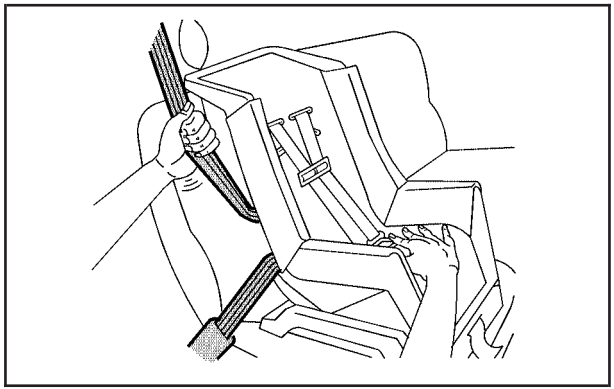

6. To tighten the belt, push down on the child restraint, pull the shoulder portion of the belt to tighten the lap portion of the belt and feed the shoulder belt back into the retractor. If you are using a forward-facing child restraint, you may find it helpful to use your knee to push down on the child restraint as you tighten the belt. You should not be able to pull more of the belt from the retractor once the lock has been set.
7. Push and pull the child restraint in different directions to be sure it is secure.
8. If the airbag or airbags are off, the off symbol on the instrument panel near the clock will be lit and stay lit when the key is turned to ON or START.

If a child restraint has been installed and the off symbol is not lit, turn the vehicle off. Remove the child restraint from the vehicle and reinstall the child restraint.

If after reinstalling the child restraint and restarting the vehicle, the off symbol is still not lit, check to make sure that the vehicle's seatback is not pressing the child restraint into the seat cushion. If this happens, slightly recline the vehicle's seatback and adjust the seat cushion if possible. Also make sure the child restraint is not trapped under the vehicle head restraint. If this happens, adjust the head restraint.

A thick layer of additional material such as a blanket, or aftermarket equipment such as seat covers heaters or massagers, located between the seat cushion and the child restraint or small occupant, can affect how the passenger sensing system operates. Remove any additional material from the seat cushion before reinstalling/securing the child restraint or small occupant.

If the off symbol is still not lit, secure the child in the child restraint in a rear seat position in the vehicle and check with your dealer.

To remove the child restraint, just unbuckle the vehicle's safety belt and let it go back all the way. The safety belt will move freely again and be ready to work for an adult or larger child passenger.

# Airbag System

Your vehicle has a frontal airbag for the driver anda frontal airbag for the right front passenger. Your vehicle may also have side impact airbags. Side impact airbags are available for the driver and right front passenger.

If your vehicle has a side impact airbag for the driver and/or the right front passenger, the word AIRBAG will appear on the airbag covering on the side of the seatback closest to the door.

Frontal airbags are designed to help reduce the risk of injury from the force of an inflating frontal airbag. But these airbags must inflate very quickly to do their job and comply with federal regulations.

Here are the most important things to know about the airbag system:

**⚠ CAUTION:**

**You can be severely injured or killed in a crash if you are not wearing your safety belt — even if you have airbags. Wearing your safety belt during a crash helps reduce your chance of hitting things inside the vehicle or being ejected from it. Airbags are "supplemental restraints" to the safety belts. All airbags are designed to work with safety belts but do not replace them.**

**Frontal airbags for the driver and right front passenger are designed to deploy in moderate to severe frontal and near frontal**

**CAUTION: (Continued)**

**CAUTION: (Continued)**

**crashes. They are not designed to inflate in rollover, rear crashes, or in many side crashes. And, for some unrestrained occupants, frontal airbags may provide less protection in frontal crashes than more forceful airbags have provided in the past.**

**Side impact airbags are designed to inflate in moderate to severe crashes where something hits the side of your vehicle. They are not designed to inflate in frontal, in rollover, or in rear crashes.**

**Everyone in your vehicle should wear a safety belt properly — whether or not there is an airbag for that person.**

**⚠ CAUTION:**

**Both frontal and side impact airbags inflate with great force, faster than the blink of an eye. If you are too close to an inflating airbag, as you would be if you were leaning forward, it could seriously injure you. Safety belts help keep you in position for airbag inflation before and during a crash. Always wear your safety belt, even with frontal airbags. The driver should sit as far back as possible while still maintaining control of the vehicle. Front occupants should not lean on or sleep against the door.**

## ⚠ CAUTION:

**Anyone who is up against, or very close to, any airbag when it inflates can be seriously injured or killed. Airbags plus lap-shoulder belts offer the best protection for adults, but not for young children and infants. Neither the vehicle's safety belt system nor its airbag system is designed for them. Young children and infants need the protection that a child restraint system can provide. Always secure children properly in your vehicle. To read how, see *Older Children on page 39* or *Infants and Young Children on page 42*.**

There is an airbag readiness light on the instrument panel cluster or the secondary information center, which shows the airbag symbol.

The system checks the airbag electrical system for malfunctions. The light tells you if there is an electrical problem. See *Airbag Readiness Light* in the Index for more information.

## Where Are the Airbags?

The driver's frontal airbag is in the middle of the steering wheel.

The right front passenger's frontal airbag is in the instrument panel on the passenger's side.

If your vehicle has a side impact airbag for the driver, it is in the side of the driver's seatback closest to the door.

If your vehicle has a side impact airbag for the right front passenger, it is in the side of the passenger's seatback closest to the door.

**⚠ CAUTION:**

**If something is between an occupant and an airbag, the airbag might not inflate properly or it might force the object into that person causing severe injury or even death. The path of an inflating airbag must be kept clear. Do not put anything between an occupant and an airbag, and do not attach or put anything on the steering wheel hub or on or near any other airbag covering. Do not let seat covers block the inflation path of a side impact airbag.**

## When Should an Airbag Inflate?

The driver's and right front passenger's frontal airbags are designed to inflate in moderate to severe frontal or near-frontal crashes. But they are designed to inflate only if the impact exceeds a predetermined deployment threshold. Deployment thresholds take into account a variety of desired deployment and non-deployment events and are used to predict how severe a crash is likely to be in time for the airbags to inflate and help restrain the occupants. Whether your frontal airbags will or should deploy is not based on how fast your vehicle is traveling. It depends largely on what you hit, the direction of the impact and how quickly your vehicle slows down.

If the front of your vehicle goes straight into a wall that does not move or deform, the threshold level is about 9 to 14 mph (14 to 23 km/h). The threshold level can vary, however, with specific vehicle design, so that it can be somewhat above or below this range.

Frontal airbags may inflate at different crash speeds. For example:

- If the vehicle hits a stationary object, the airbags could inflate at a different crash speed than if the vehicle hits a moving object.
- If the vehicle hits an object that deforms, the airbags could inflate at a different crash speed than if the vehicle hits an object that does not deform.
- If the vehicle hits a narrow object (like a pole), the airbags could inflate at a different crash speed than if the vehicle hits a wide object (like a wall).
- If the vehicle goes into an object at an angle, the airbags could inflate at a different crash speed than if the vehicle goes straight into the object.

The frontal airbags (driver and right front passenger) are not intended to inflate during vehicle rollovers, rear impacts, or in many side impacts.

Your vehicle may or may not have side impact airbags. See *Airbag System on page 68*. Side impact airbags are intended to inflate in moderate to severe side crashes. A side impact airbag will inflate if the crash severity is above the system's designed "threshold level." The threshold level can vary with specific vehicle design. Side impact airbags are not intended to inflate in frontal or near-frontal impacts, rollovers, or rear impacts. A side impact airbag is intended to deploy on the side of the vehicle that is struck.

In any particular crash, no one can say whether an airbag should have inflated simply because of the damage to a vehicle or because of what the repair costs were. For frontal airbags, inflation is determined by what the vehicle hits, the angle of the impact, and how quickly the vehicle slows down in frontal and near-frontal impacts. For side impact airbags, inflation is determined by the location and severity of the impact.

## What Makes an Airbag Inflate?

In an impact of sufficient severity, the airbag sensing system detects that the vehicle is in a crash. The sensing system triggers a release of gas from the inflator, which inflates the airbag. The inflator, the airbag and related hardware are all part of the airbag modules. Frontal airbag modules are located inside the steering wheel and instrument panel. For seating positions with side impact airbags, there are also airbag modules in the side of the seatbacks closest to the door.

## How Does an Airbag Restrain?

In moderate to severe frontal or near frontal collisions, even belted occupants can contact the steering wheel or the instrument panel. In moderate to severe side collisions, even belted occupants can contact the inside of the vehicle. Airbags supplement the protection provided by safety belts.

Airbags distribute the force of the impact more evenly over the occupant's upper body, stopping the occupant more gradually. But the frontal airbags would not help you in many types of collisions, including rollovers, rear impacts, and many side impacts, primarily because an occupant's motion is not toward the airbag. Side impact airbags would not help you in many types of collisions, including many frontal or near frontal collisions, rollovers, and rear impacts.

Airbags should never be regarded as anything more than a supplement to safety belts, and then only in moderate to severe frontal or near-frontal collisions for the driver's and right front passenger's frontal airbags, and only in moderate to severe side collisions for vehicles with side impact airbags.

## What Will You See After an Airbag Inflates?

After an airbag inflates, it quickly deflates, so quickly that some people may not even realize the airbag inflated. Some components of the airbag module — the steering wheel hub for the driver's frontal airbag, the instrument panel for the right front passenger's frontal airbag, and for seating positions with side impact airbags, the side of the seatback closest to the door — may be hot for a short time. The parts of the airbag that come into contact with you may be warm, but not too hot to touch. There may be some smoke and dust coming from the vents in the deflated airbags. Airbag inflation does not prevent the driver from seeing out of the windshield or being able to steer the vehicle, nor does it prevent people from leaving the vehicle.

### ⚠ CAUTION:

**When an airbag inflates, there may be dust in the air. This dust could cause breathing problems for people with a history of asthma or other breathing trouble. To avoid this, everyone in the vehicle should get out as soon as it is safe to do so. If you have breathing problems but cannot get out of the vehicle after an airbag inflates, then get fresh air by opening a window or a door. If you experience breathing problems following an airbag deployment, you should seek medical attention.**

Your vehicle has a feature that may automatically unlock the doors, turn the interior lamps on when the airbags inflate and turn on the hazard warning flashers. You can lock the doors, turn the interior lamps off, and turn the hazard warning flashers on by using the controls for those features.

In many crashes severe enough to inflate an airbag, windshields are broken by vehicle deformation. Additional windshield breakage may also occur from the right front passenger airbag.

- Airbags are designed to inflate only once. After they inflate, you will need some new parts for your airbag system. If you do not get them, the airbag system will not be there to help protect you in another crash. A new system will include airbag modules and possibly other parts. The service manual for your vehicle covers the need to replace other parts.
- Your vehicle has a crash sensing and diagnostic module which records information after a crash. See *Vehicle Data Collection and Event Data Recorders on page 414*.
- Let only qualified technicians work on your airbag system. Improper service can mean that an airbag system will not work properly. See your dealer for service.

## Passenger Sensing System

Your vehicle has a passenger sensing system for the right front passenger position. The passenger airbag status indicator will be visible when you turn your ignition key to ON or START.

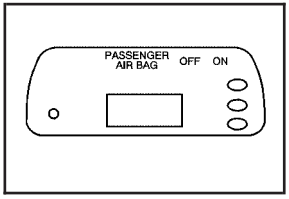


**United States – Sedan**

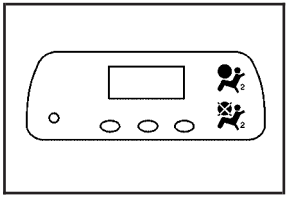

**Canada – Sedan**

If you have a sedan, the airbag off symbol will be visible near the clock, located in the center of the instrument panel, during the system check. See *Passenger Airbag Status Indicator (Sedan) on page 162*.

**United States – Hatchback**

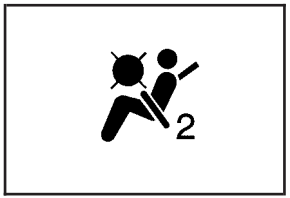


**Canada – Hatchback**

If you have a hatchback, the airbag off symbol will be visible in the Secondary Information Center (SIC) during the system check. See *Secondary Information Center (SIC) (Hatchback Only) on page 175*. When the system check is complete, the airbag off symbol will be visible under certain conditions.

The passenger sensing system will turn off the right front passenger's frontal airbag and side impact airbag (if equipped) under certain conditions. The driver's airbags are not part of the passenger sensing system.

The passenger sensing system works with a sensor that is part of the right front passenger's seat cushion. The sensor is designed to detect the presence of a properly-seated occupant and determine if the passenger's frontal airbag and side impact airbag (if equipped) should be enabled (may inflate) or not.

Accident statistics show that children are safer if they are restrained in the rear, rather than the front seat. We recommend that child restraints be secured in a rear seat, including an infant riding in a rear-facing infant seat, a child riding in a forward-facing child seat, and an older child riding in a booster seat.

Your vehicle has a rear seat that accommodates a rear-facing child restraint. A label on your sun visor says, "Never put a rear-facing child seat in the front." This is because the risk to the rear-facing child is so great, if the airbag deploys.

**⚠ CAUTION:**

**A child in a rear-facing child restraint can be seriously injured or killed if the right front passenger's airbag inflates.**

**CAUTION: (Continued)**

**CAUTION: (Continued)**

**This is because the back of the rear-facing child restraint would be very close to the inflating airbag.**

**Even though the passenger sensing system is designed to turn off the passenger's frontal airbag and side impact airbag (if equipped) if the system detects a rear-facing child restraint, no system is fail-safe, and no one can guarantee that an airbag will not deploy under some unusual circumstance, even though it is turned off. We recommend that rear-facing child restraints be secured in the rear seat, even if the airbag or airbags are off.**

**If you need to secure a forward-facing child restraint in the right front seat, always move the front passenger seat as far back as it will go. It is better to secure the child restraint in a rear seat.**

The passenger sensing system is designed to turn off the right front passenger's frontal airbag and side impact airbag (if equipped) if:

- The right front passenger seat is unoccupied.
- The system determines that an infant is present in a rear-facing infant seat.
- The system determines that a small child is present in a forward-facing child restraint.
- The system determines that a small child is present in a booster seat.
- A right front passenger takes his/her weight off of the seat for a period of time.
- The right front passenger seat is occupied by a smaller person, such as a child who has outgrown child restraints.
- Or, if there is a critical problem with the airbag system or the passenger sensing system.

When the passenger sensing system has turned off the passenger's frontal airbag and side impact airbag (if equipped), the off symbol will light and stay lit to remind you that the airbag or airbags are off. See *Passenger Airbag Status Indicator (Sedan) on page 162*.

If a child restraint has been installed and the off symbol is not lit, turn the vehicle off. Remove the child restraint from the vehicle and reinstall the child restraint following the child restraint manufacturer's directions and refer to *Securing a Child Restraint in the Right Front Seat Position on page 62*.

If, after reinstalling the child restraint and restarting the vehicle, the off symbol is still not lit, check to make sure that the vehicle's seatback is not pressing the child restraint into the seat cushion. If this happens, slightly recline the vehicle's seatback and adjust the seat cushion if possible. Also make sure the child restraint is not trapped under the vehicle head restraint. If this happens, adjust the head restraint.

If the off symbol is still not lit, secure the child in the child restraint in a rear seat position in the vehicle and check with your dealer.

The passenger sensing system is designed to enable (may inflate) the right front passenger's frontal airbag and side impact airbag (if equipped) anytime the system senses that a person of adult size is sitting properly in the right front passenger's seat. When the passenger sensing system has allowed the airbag or airbags to be enabled, the off symbol will not light.

For some children who have outgrown child restraints and for very small adults, the passenger sensing system may or may not turn off the right front passenger's frontal airbag and side impact airbag (if equipped), depending upon the person's seating posture and body build. Everyone in your vehicle who has outgrown child restraints should wear a safety belt properly — whether or not there is an airbag for that person.

If a person of adult-size is sitting in the right front passenger's seat, but the off symbol is lit, it could be because that person is not sitting properly in the seat. If this happens do the following:

Turn the vehicle off and ask the person to place the seatback in the fully upright position, then sit upright in the seat, centered on the seat cushion, with the person's legs comfortably extended. Restart the vehicle and have the person remain in this position for about two minutes. This allows the system to detect that person and then enable the passenger's airbag or airbags.

## ⚠ CAUTION:

**If the airbag readiness light in the instrument panel cluster ever comes on and stays on, it means that something may be wrong with the airbag system. If this ever happens, have the vehicle serviced promptly, because an adult-size person sitting in the right front passenger's seat may not have the protection of the frontal airbag and side airbag (if equipped). See *Airbag Readiness Light on page 176* for more on this, including important safety information.**

A thick layer of additional material such as a blanket, or aftermarket equipment such as seat covers, seat heaters, and seat massagers can affect how well the passenger sensing system operates. Remove any additional material from the seat cushion before reinstalling or securing the child restraint or small occupant.

You might want to consider not using seat covers or other aftermarket equipment if your vehicle has the passenger sensing system. See *Adding Equipment to Your Airbag-Equipped Vehicle on page 83* for more information about modifications that can affect how the system operates.

## Servicing Your Airbag-Equipped Vehicle

Airbags affect how your vehicle should be serviced. There are parts of the airbag system in several places around your vehicle. You do not want the system to inflate while someone is working on your vehicle. Your dealer and the service manual have information about servicing your vehicle and the airbag system. To purchase a service manual, see *Service Publications Ordering Information on page 421*.

**⚠ CAUTION:**

**For up to 10 seconds after the ignition key is turned off and the battery is disconnected, an airbag can still inflate during improper service. You can be injured if you are close to an airbag when it inflates. Avoid yellow connectors. They are probably part of the airbag system. Be sure to follow proper service procedures, and make sure the person performing work for you is qualified to do so.**

The airbag system does not need regular maintenance.

## Adding Equipment to Your Airbag-Equipped Vehicle

**Q: Is there anything I might add to the front or sides of the vehicle that could keep the airbags from working properly?**

**A:** Yes. If you add things that change your vehicle's frame, bumper system, height, front end or side sheet metal, they may keep the airbag system from working properly. Also, the airbag system may not work properly if you relocate any of the airbag sensors. If you have any questions about this, you should contact Customer Assistance before you modify your vehicle. The phone numbers and addresses for Customer Assistance are in Step Two of the Customer Satisfaction Procedure in this manual. See *Customer Satisfaction Procedure on page 402*.

**Q: Because I have a disability, I have to get my vehicle modified. How can I find out whether this will affect my airbag system?**

**A:** Changing or moving any parts of the front seats, safety belts, the airbag sensing and diagnostic module, steering wheel, the instrument panel, or airbag wiring can affect the operation of the airbag system. If you have questions, call Customer Assistance. The phone numbers and addresses for Customer Assistance are in Step Two of the Customer Satisfaction Procedure in this manual. See *Customer Satisfaction Procedure on page 402*.

# Restraint System Check

## Checking the Restraint Systems

Now and then, make sure the safety belt reminder light and all your belts, buckles, latch plates, retractors and anchorages are working properly. Look for any other loose or damaged safety belt system parts. If you see anything that might keep a safety belt system from doing its job, have it repaired. See *Care of Safety Belts on page 348*.

Torn or frayed safety belts may not protect you in a crash. They can rip apart under impact forces. If a belt is torn or frayed, get a new one right away.

Also look for any opened or broken airbag covers, and have them repaired or replaced. The airbag system does not need regular maintenance.

***Notice:*** **If you damage the covering for the driver's or the right front passenger's frontal airbag, or an airbag covering (if equipped) on a seatback, the airbag may not work properly. You may have to replace the airbag module in the steering wheel, both the airbag module and the instrument panel for the right front passenger's frontal airbag, or both the airbag module and the seatback for seating positions with a side impact airbag (if equipped.) Do not open or break the airbag coverings.**

## Replacing Restraint System Parts After a Crash

**⚠ CAUTION:**

**A crash can damage the restraint systems in your vehicle. A damaged restraint system may not properly protect the person using it, resulting in serious injury or even death in a crash. To help make sure your restraint systems are working properly after a crash, have them inspected and any necessary replacements made as soon as possible.**

If you have had a crash, do you need new belts or LATCH system parts?

After a very minor collision, nothing may be necessary. But if the belts were stretched, as they would be if worn during a more severe crash, then you need new parts.

If the LATCH system was being used during a more severe crash, you may need new LATCH system parts.

If belts are cut or damaged, replace them. Collision damage also may mean you will need to have LATCH system, safety belt or seat parts repaired or replaced. New parts and repairs may be necessary even if the belt or LATCH system was not being used at the time of the collision.

If an airbag inflates, you will need to replace airbag system parts. See the part about the airbag system earlier in this section.

If the frontal airbags inflate, you will also need to replace the driver's and right front passenger's safety belt pretensioners and safety belt. Be sure to do so. Then the new pretensioner and safety belt will be there to help protect you in a collision.

After a crash you may need to replace the driver and right front passenger's safety belt retractor assemblies, even if the frontal airbags have not deployed. The driver and right front passenger's safety belt retractor assemblies contain the safety belt pretensioners. Have your safety belt pretensioners checked if your vehicle has been in a collision, or if your airbag readiness light stays on after you start your vehicle or while you are driving. See *Airbag Readiness Light on page 176*.

# NOTES

# Section 2 Features and Controls


**Keys** ..... 88
Remote Keyless Entry System ..... 90
Remote Keyless Entry System Operation .... 91

**Doors and Locks** ..... 94
Door Locks ..... 94
Central Door Unlocking System ..... 95
Door Ajar Reminder ..... 96
Rear Door Security Locks ..... 96
Lockout Protection ..... 97
Trunk ..... 98
Liftgate (Hatchback) ..... 100

**Windows** ..... 101
Manual Windows ..... 102
Power Windows ..... 102
Sun Visors ..... 103

**Theft-Deterrent Systems** ..... 103
Theft-Deterrent System ..... 103
Immobilizer ..... 106
Immobilizer Operation ..... 106

**Starting and Operating Your Vehicle** ..... 107
New Vehicle Break-In ..... 107
Ignition Positions ..... 108
Starting the Engine ..... 109
Engine Coolant Heater ..... 110
Automatic Transaxle Operation ..... 111
Manual Transaxle Operation ..... 115
Parking Brake ..... 117
Shifting Into Park (P)
(Automatic Transaxle) ..... 118
Shifting Out of Park (P) ..... 119
Parking Your Vehicle
(Manual Transaxle) ..... 120
Parking Over Things That Burn ..... 121
Engine Exhaust ..... 122
Running the Engine While Parked ..... 122

**Mirrors** ..... 124
Manual Rearview Mirror ..... 124
Outside Manual Mirrors ..... 124
Outside Power Mirror ..... 125
Outside Convex Mirror ..... 126
Outside Heated Mirrors ..... 126

**Storage Areas** ..... 126
Glove Box ..... 127
Cupholder(s) ..... 127
Sunglasses Storage Compartment ..... 127

**Sunroof** ..... 128

# Keys

**⚠ CAUTION:**

**Leaving children in a vehicle with the ignition key is dangerous for many reasons. They could operate the power windows or other controls or even make the vehicle move. The children or others could be badly injured or even killed. Do not leave the keys in a vehicle with children.**

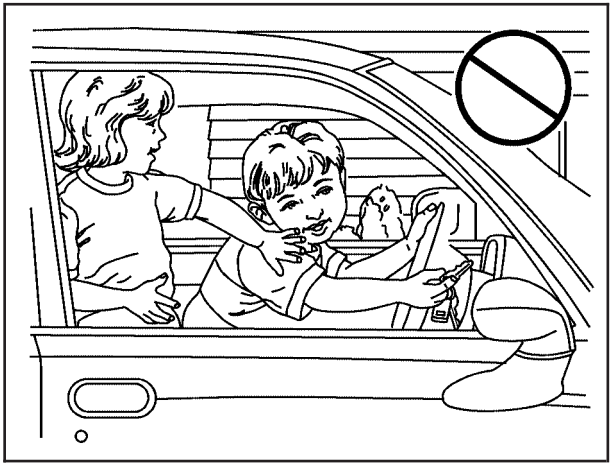

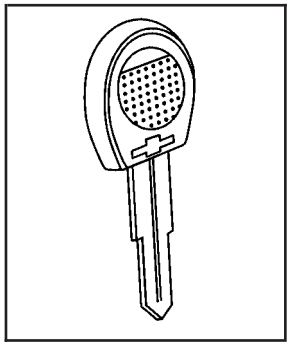

One key is used for the ignition, the doors and all other locks.

When a new vehicle is delivered, the dealer removes the key tag and gives it to the first owner. The tag has a code on it that tells your dealer how to make extra keys. For vehicle security, keep the key tag in a safe place and also record the key number somewhere other than inside of the vehicle. If you lose your key, you will be able to have a new one made easily using the tag.

Your vehicle may have an electronic immobilizer designed to protect your car against theft. If so, only keys with the correct electronic code can be used to start the vehicle. See *Immobilizer Operation on page 106* for additional information. Even if a key has the same profile, it will not start the engine if the electronic code is incorrect. If you need a new key, contact your dealer who can obtain the correct key code. Also see *Roadside Assistance Program on page 408*.

***Notice:*** **If you ever lock your keys in your vehicle, you may have to damage the vehicle to get in. Be sure you have spare keys.**

## Remote Keyless Entry System

If the vehicle has the keyless entry system, it operates on a radio frequency subject to Federal Communications Commission (FCC) Rules and with Industry Canada.

This device complies with Part 15 of the FCC Rules. Operation is subject to the following two conditions:

1. This device may not cause interference.
2. This device must accept any interference received, including interference that may cause undesired operation of the device.

This device complies with RSS-210 of Industry Canada. Operation is subject to the following two conditions:

1. This device may not cause interference.
2. This device must accept any interference received, including interference that may cause undesired operation of the device.

Changes or modifications to this system by other than an authorized service facility could void authorization to use this equipment.

At times you may notice a decrease in range. This is normal for any remote keyless entry system. If the transmitter does not work or if you have to stand closer to your vehicle for the transmitter to work, try this:

- Check the distance. You may be too far from your vehicle. You may need to stand closer during rainy or snowy weather.
- Check the location. Other vehicles or objects may be blocking the signal. Take a few steps to the left or right, hold the transmitter higher, and try again.
- Check to determine if battery replacement is necessary. See “Battery Replacement” under *Remote Keyless Entry System Operation on page 91*.
- If you are still having trouble, see your dealer or a qualified technician for service.

## Remote Keyless Entry System Operation

You can lock and unlock your vehicle's doors from about 20 ft (6 m) away using the Remote Keyless Entry (RKE) transmitter.

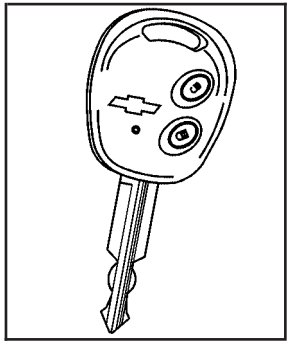

**Hatchback**

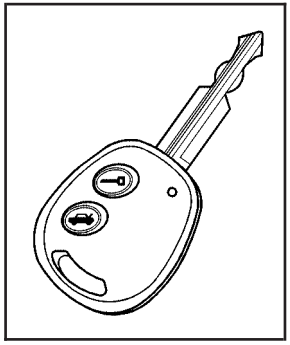

**Sedan**

The following functions may be available if your vehicle has the RKE system:

### Hatchback

**(Lock):** Press this button to lock all of the doors. If all of the doors and the trunk or liftgate are closed, the hazard lamps will flash once and the horn will chirp to indicate that locking has occurred and that the theft-deterrent system is active.

**(Unlock):** Press this button to unlock all of the doors. The hazard lamps will flash twice to indicate that unlocking has occurred and that the theft-deterrent system is deactivated.

### Sedan

**(Lock/Unlock):** Press this button to lock all of the doors. The hazard lamps will flash once to indicate that locking has occurred and that the theft-deterrent system is active. Press this button again to unlock all of the doors. The hazard lamps will flash twice to indicate that unlocking has occurred and that the theft-deterrent system is deactivated.

**(Remote Trunk Release):** Press and hold this button for approximately one second to open the trunk.

The LED light, on the transmitter, will flash when the buttons on the transmitter are pressed.

The lock and unlock buttons will not operate and the theft-deterrent system will not activate while the key is in the ignition.

## Matching Transmitter(s) to Your Vehicle

Each RKE transmitter is coded to prevent another transmitter from unlocking your vehicle. If a transmitter is lost or stolen, a replacement can be purchased through your dealer. Remember to bring any remaining transmitters with you when you go to your dealer. When the dealer matches the replacement transmitter to your vehicle, any remaining transmitters must also be matched. Once your dealer has coded the new transmitter, the lost transmitter will not unlock your vehicle. Each vehicle can have a maximum of five transmitters matched to it.

## Battery Replacement

Under normal use, the battery in your RKE transmitter should last about two years.

The battery is weak if the LED fails to illuminate or if the transmitter will not work at the normal range in any location. If you have to get close to your vehicle before the transmitter works, it is probably time to change the battery.

***Notice:*** **When replacing the battery, use care not to touch any of the circuitry. Static from your body transferred to these surfaces may damage the transmitter.**

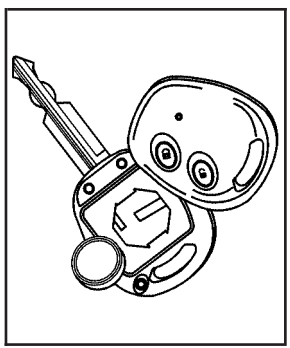

**Hatchback**

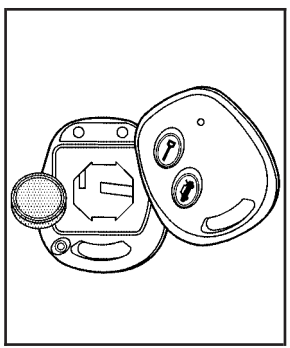

**Sedan**

To replace the battery in the RKE transmitter, do the following:

1. Remove the screw from the back of the cover and open the cover of the transmitter.
2. Pull the transmitter out of the cover and carefully detach the sticker from the unit. Keep the sticker clean.
3. Remove the battery and replace it with the new one. Make sure the positive side of the battery faces up. Use one three-volt, CR1620, or equivalent, type battery.
4. Attach the sticker and put the transmitter unit in the cover.
5. Put the two halves back together and replace the screw. Make sure the cover is on tightly, so water will not get in.
6. Test the transmitter operation.

# Doors and Locks

## Door Locks

**⚠ CAUTION:**

**Unlocked doors can be dangerous.**

- **Passengers, especially children, can easily open the doors and fall out of a moving vehicle. When a door is locked, the handle will not open it. You increase the chance of being thrown out of the vehicle in a crash if the doors are not locked. So, wear safety belts properly and lock the doors whenever you drive.**

**CAUTION: (Continued)**

**CAUTION: (Continued)**

- **Young children who get into unlocked vehicles may be unable to get out. A child can be overcome by extreme heat and can suffer permanent injuries or even death from heat stroke. Always lock your vehicle whenever you leave it.**
- **Outsiders can easily enter through an unlocked door when you slow down or stop your vehicle. Locking your doors can help prevent this from happening.**

There are several ways to lock and unlock your vehicle.

From the outside, use your key or the Remote Keyless Entry (RKE) transmitter. See *Remote Keyless Entry System Operation on page 91*.

To manually unlock the front doors from the outside, insert the key and turn it toward the front of the vehicle. To manually lock the doors from the outside, insert the key and turn it toward the rear of the vehicle.

All doors, except for the driver's door, can be locked by pushing down the manual door lock and then closing the door. The driver's door can only by locked from the outside by using the key or the optional remote keyless entry transmitter.

From the inside, you can lock and unlock all of the doors by pushing or pulling the manual door lock located on each door.

## Central Door Unlocking System

Your vehicle may be equipped with the central door unlocking system. This system is activated from the driver's door.

From the outside, you can lock or unlock all the doors by using either the key or the remote keyless entry transmitter, if equipped. From the inside, you can lock or unlock all the doors by using the driver's door lock switch while the driver's door is closed.

## Door Ajar Reminder

If one of the doors on the sedan is not closed properly while the ignition is on, the door ajar light on the instrument panel comes on and stays on until the doors are closed.

If one of the doors on the hatchback is not closed properly while the ignition is on, the door ajar light on the secondary information center comes on and stays on until the doors are closed.

## Rear Door Security Locks

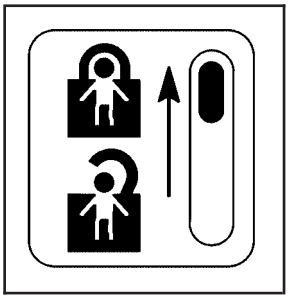

Your vehicle has rear door security locks on each rear door that help prevent passengers from opening the rear doors on your vehicle from the inside.

### Using the Rear Door Security Lock

1. Move the lever upward to lock.
2. Close the door.
3. Do the same thing to the other rear door lock.

***Notice:*** **Pulling the inside door handle while the rear door security locks are engaged could damage your vehicle. Do not pull the inside door handle while the rear door security locks are engaged.**

The rear doors on your vehicle cannot be opened from the inside while this feature is in use.

## Opening a Rear Door When the Security Lock is On

1. Unlock the door from the inside.
2. Open the door from the outside.

If you do not cancel the security lock, adults or older children who ride in the rear will not be able to open the rear door from the inside. You should let adults and older children know how to cancel the locks.

## Canceling the Rear Door Security Lock

1. Unlock the door from the inside and open the door from the outside.
2. Move the lever downward to unlock.
3. Do the same for the other rear door.

The rear door locks will now work normally.

## Lockout Protection

This feature helps prevent locking your key in the car. The driver's door can only be locked with the door closed. From the outside of the vehicle, close the driver's door and lock it using the key or the remote keyless entry transmitter, if equipped.

This feature cannot guarantee that you will never be locked out of your vehicle. Always remember to take your key with you.

## Trunk

**⚠ CAUTION:**

**It can be dangerous to drive with the trunk lid open because carbon monoxide (CO) gas can come into your vehicle. You cannot see or smell CO. It can cause unconsciousness and even death. If you must drive with the trunk lid open or if electrical wiring or other cable connections must pass through the seal between the body and the trunk lid:**

- **Make sure all other windows are shut.**
- **Turn the fan on your heating or cooling system to its highest speed and select the control setting that will force outside air into your vehicle. See Climate Control System.**
- **If you have air outlets on or under the instrument panel, open them all the way.**

**See *Engine Exhaust on page 122*.**

To open the trunk on your sedan from outside of your vehicle, insert the key into the lock cylinder and turn the key clockwise or use the remote keyless entry transmitter, if equipped.

### Remote Trunk Release

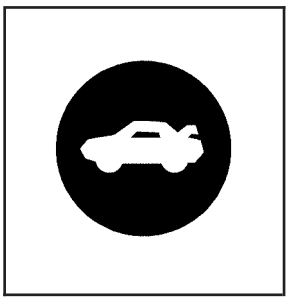

**Trunk Release Button**

If your vehicle has a trunk release button located on the driver's door, you can open the trunk from inside your vehicle by pressing the release button.

When closing the trunk, close from the center to ensure it fully latches.

**Trunk Release Lever**

If your vehicle has a trunk release lever located on the outboard side of the driver's seat, you can open the trunk from inside your vehicle by pulling the release lever.

## Emergency Trunk Release Handle

***Notice:*** **Do not use the emergency trunk release handle as a tie-down or anchor point when securing items in the trunk as it could damage the handle. The emergency trunk release handle is only intended to aid a person trapped in a latched trunk, enabling them to open the trunk from the inside.**

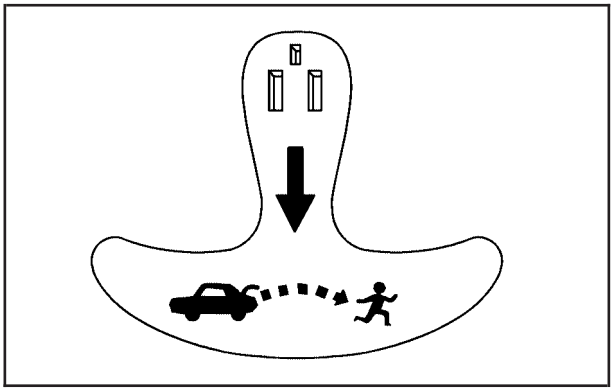

There is a glow-in-the-dark emergency trunk release handle located on the underside of the trunk lid. This handle will glow following exposure to light. Pull the release handle down to open the trunk from the inside.

## Liftgate (Hatchback)

**⚠ CAUTION:**

**It can be dangerous to drive with the liftgate open because carbon monoxide (CO) gas can come into your vehicle. You cannot see or smell CO. It can cause unconsciousness and even death. If you must drive with the liftgate open or if electrical wiring or other cable connections must pass through the seal between the body and the liftgate:**

- **Make sure all other windows are shut.**
- **Turn the fan on your heating or cooling system to its highest speed and select the control setting that will force outside air into your vehicle. See *Climate Control System on page 150*.**
- **If you have air outlets on or under the instrument panel, open them all the way. See *Engine Exhaust on page 122*.**

To open the liftgate on your hatchback from outside of the vehicle, insert the key into the lock cylinder and turn it counterclockwise or use the remote keyless entry transmitter, if equipped. Then pull up the handle above the license plate to open the liftgate.

When closing the liftgate, close from the center to ensure it fully latches.

To lock the liftgate, insert the key into the lock cylinder and turn it clockwise or use the remote keyless entry transmitter, if equipped.

The liftgate can also be locked or unlocked by the central door unlocking system or remote keyless entry, if equipped. See *Central Door Unlocking System on page 95* and *Remote Keyless Entry System Operation on page 91*.

## Windows

**⚠ CAUTION:**

**Leaving children, helpless adults, or pets in a vehicle with the windows closed is dangerous. They can be overcome by the extreme heat and suffer permanent injuries or even death from heat stroke. Never leave a child, a helpless adult, or a pet alone in a vehicle, especially with the windows closed in warm or hot weather.**

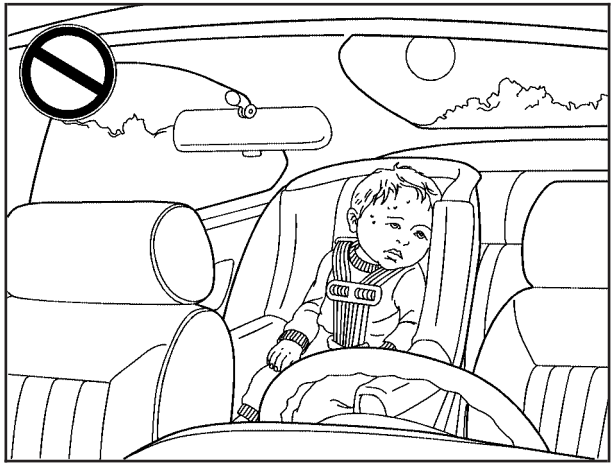

## Manual Windows

Use the window crank to open and close each window.

The rear windows do not open fully.

## Power Windows

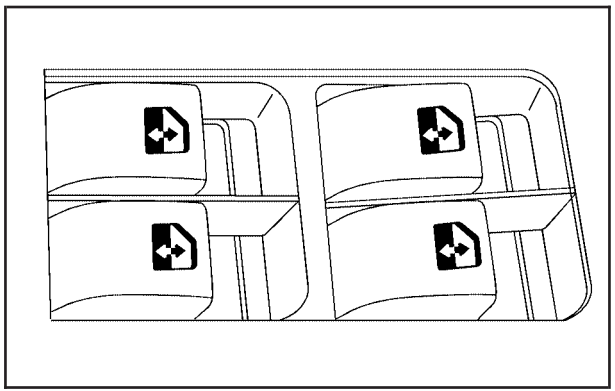

If your vehicle has power windows, the switches are located on the driver's door. In addition, each passenger door has a switch for its own window.

The ignition must be turned to ON to use the power windows. To lower the window, press and hold the switch. To raise the window, lift up on the switch. Release the switch when the window reaches the desired level.

## Window Lockout

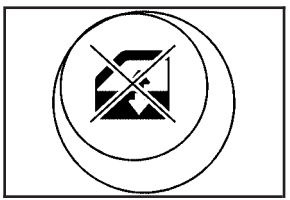

The window lockout is located with the driver's power window switches.

Press the lockout button to stop the front and rear passengers from using their window switches. The driver can still operate all the windows with the lockout on. Press the lockout button again to return to normal window operation.

## Sun Visors

To block out glare you can swing down the visors. You can also remove them from the center mount and swing them to the side.

### Visor Vanity Mirror

Your vehicle has vanity mirrors located on the back of the sun visors. Swing down the sun visor to expose the vanity mirror.

# Theft-Deterrent Systems

Vehicle theft is big business, especially in some cities. Although your vehicle has a number of theft-deterrent features, we know that nothing we put on it can make it impossible to steal.

## Theft-Deterrent System

Your vehicle may have a theft-deterrent system.

The theft-deterrent system will not arm when you lock the doors using the key or the manual door lock. It arms only when you use the remote keyless entry transmitter.

### Arming the System

To arm the system, do the following:

1. Close the doors, the windows, the hood, and the trunk or liftgate.

   Ensure that the windows are closed, as the system can be armed even if the windows are open.

2. Turn the key to LOCK and remove the key from the ignition.

   If the key is inserted in the ignition, the transmitter will not arm the theft-deterrent system.

3. Lock the doors by pressing the lock button on the remote keyless entry transmitter.
   - The LED light on the transmitter will flash once.
   - All of the doors will lock.
   - The hazard warning lamps will flash once and the horn will chirp.
   - The security light will flash to indicate that the theft-deterrent system is armed. For hatchback models, the security light is located on the secondary information center (SIC) on the center of the instrument panel. See *Secondary Information Center (SIC) (Hatchback Only) on page 175*. For sedan models, the security light is located on the center of the instrument panel near the clock. See *Instrument Panel Overview on page 132*.

To avoid activating the alarm by accident, do one of the following:

- Unlock the driver's or passenger's front door using the key.
- Press the unlock button on the remote keyless entry transmitter.

Unlocking a door any other way will activate the alarm when a door or the trunk or liftgate is opened.

If you do not want to arm the theft-deterrent system, lock the vehicle using the key or the manual door locks.

## Disarming the System

To disarm the system, do one of the following:

- Unlock the driver's or passenger's front door using the key.
- Press the unlock button on the remote keyless entry transmitter.
  - The LED light on the transmitter will flash once.
  - All of the doors will unlock.
  - The hazard warning lamps will flash twice.

If the door is not opened or if the engine is not started within 30 seconds after disarming the system using the transmitter, all of the doors will automatically lock and the theft-deterrent mode will rearm.

## How the System Alarm is Activated

If a door or the trunk or liftgate is opened without using the key or the remote keyless entry transmitter, the horn will sound and the lamps will flash for up to 30 seconds.

## How to Turn Off the System Alarm

If the system alarm is active, it can be deactivated using one of the following methods:

- Press the lock or unlock buttons on the remote keyless entry transmitter.
- Unlock the driver's or passenger's front door using the key.

Otherwise, the alarm will automatically stop after 30 seconds. The system will then lock the doors and rearm the theft-deterrent system.

## How to Detect a Tamper Condition

If the hazard warning lamps flash once when you press the lock or unlock buttons on the remote keyless entry transmitter, the theft-deterrent system alarm was activated while you were away.

## Immobilizer

This device complies with Part 15 of the FCC Rules. Operation is subject to the following two conditions:

1. This device may not cause interference.
2. This device must accept any interference received, including interference that may cause undesired operation.

This device complies with RSS-210 of Industry Canada. Operation is subject to the following two conditions:

1. This device may not cause interference.
2. This device must accept any interference received, including interference that may cause undesired operation of the device.

Changes or modifications to this system by other than an authorized service facility could void authorization to use this equipment.

## Immobilizer Operation

Your vehicle may have a passive theft-deterrent system. The immobilizer system prevents your vehicle from being started by unauthorized persons.

If your vehicle has an immobilizer system, your vehicle has a special key that works with the theft-deterrent system. There is a transponder in the key head that is electronically coded. The correct key will start the vehicle. An invalid key immobilizes the engine. The immobilizer system isolates the power supply to the ignition system, the fuel pump and the fuel injectors.

The engine immobilizer is activated after the key is turned to LOCK and removed from the ignition. The security light located on the top center of the instrument panel in the secondary information center will flash when the immobilizer is active. If the light does not flash after removing the key, have the system checked by your dealer.

If the immobilizer system does not recognize the electronic code when the key is turned to START, the engine will not start and the security indicator will continue blinking. If your key is ever damaged, you may not be able to start your vehicle.

When trying to start the vehicle, if the engine does not start and the security light continues flashing, the key may have a damaged transponder. Turn the ignition off and try again.

If the engine still does not start, and the key appears to be undamaged, try another key. At this time, you may also want to check the fuse. See *Fuses and Circuit Breakers on page 356*. If the engine still does not start with the other key, your vehicle needs service. If your vehicle does start, the first key may be faulty. See your dealer who can have a new key made.

Up to five keys may be programmed for the vehicle. If you lose or damage your keys, only a GM dealer can have new keys made.

If you are ever driving and the security light comes on and stays on, you will be able to restart your engine if you turn it off. The theft-deterrent system, however, is not working properly and must be serviced by your dealer. Your vehicle is not protected by the theft-deterrent system at this time.

In an emergency, contact Roadside Assistance. See *Roadside Assistance Program on page 408*.

# Starting and Operating Your Vehicle

## New Vehicle Break-In

***Notice:*** **Your vehicle does not need an elaborate break-in. But it will perform better in the long run if you follow these guidelines:**

- **Do not drive at any one constant speed, fast or slow, for the first 500 miles (805 km). Do not make full-throttle starts. Avoid downshifting to brake, or slow, the vehicle.**
- **Avoid making hard stops for the first 200 miles (322 km) or so. During this time your new brake linings are not yet broken in. Hard stops with new linings can mean premature wear and earlier replacement. Follow this breaking-in guideline every time you get new brake linings.**

**Following break-in, engine speed and load can be gradually increased.**

## Ignition Positions

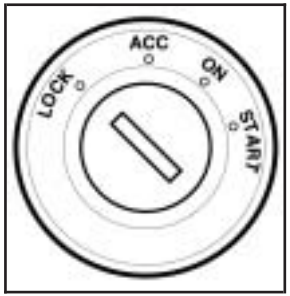


With the key in the ignition switch, you can turn the key to four different positions.

### ⚠ CAUTION:

**On manual transaxle vehicles, turning the key to LOCK and removing it will lock the steering column and result in a loss of ability to steer the vehicle. This could cause a collision. If you need to turn the engine off while the vehicle is moving, turn the key only to ACC. Do not push the key in while the vehicle is moving.**

***Notice:*** **Using a tool to force the key from the ignition switch could cause damage or break the key. Use the correct key and turn the key only with your hand. Make sure the key is all the way in. If it is, turn the steering wheel left and right while you turn the key hard. If none of this works, then your vehicle needs service.**

**LOCK:** This position locks your steering wheel, ignition, shift lever and transaxle. This is the only position in which you can insert or remove the key. For easier key operation when unlocking the steering wheel, move the steering wheel from right to left and turn the key to ACC.

**ACC (Accessory):** This position operates some of your electrical accessories, such as the radio, but not the climate control system.

**ON:** This is the position to which the switch returns after you start your engine and release the key. The switch stays in ON when the engine is running. But even when the engine is not running, you can use ON to operate your electrical accessories, and to display some instrument panel warning lights.

**START:** This position starts the engine. When the engine starts, release the key. The switch will return to ON for normal driving. Do not turn the key to START if the engine is running.

Even if the engine is not running, ACC and ON allow you to operate electrical accessories, such as the radio.

# Starting the Engine

## Automatic Transaxle

Move the shift lever to PARK (P) or NEUTRAL (N). The engine will not start in any other position — that is a safety feature. To restart when you are already moving, use NEUTRAL (N) only.

***Notice:*** **Shifting into PARK (P) with the vehicle moving could damage the transaxle. Shift into PARK (P) only when your vehicle is stopped.**

## Manual Transaxle

The shift lever should be in NEUTRAL and the parking brake engaged. Hold the clutch pedal to the floor and start the engine. Your vehicle will not start if the clutch pedal is not all the way down — that is a safety feature.

## Starting Procedure

1. With your foot off the accelerator pedal, turn the ignition to START. When the engine starts, let go of the key. The idle speed will go down as your engine gets warm.

***Notice:*** **Holding your key in START for longer than 15 seconds at a time will cause your battery to be drained much sooner. And the excessive heat can damage your starter motor. Wait about 15 seconds between each try to help avoid draining your battery or damaging your starter.**

2. If it does not start, wait about 15 seconds and try again to start the engine by turning the ignition to START. Wait about 15 seconds between each try.

   When the engine has run about 10 seconds to warm up, your vehicle is ready to be driven. Do not run your engine at high speed when it is cold.

   If the weather is below freezing (32°F or 0°C), let the engine run for a few minutes to warm up.

3. If the engine still will not start, or starts but then stops, it could be flooded with too much gasoline. Try pushing your accelerator pedal all the way to the floor and holding it there as you hold the key in START for about three seconds. If the vehicle starts briefly but then stops again, do the same thing, but this time keep the pedal down for five or six seconds. This clears the extra gasoline from the engine.

***Notice:*** **Your engine is designed to work with the electronics in your vehicle. If you add electrical parts or accessories, you could change the way the engine operates. Before adding electrical equipment, check with your dealer. If you do not, your engine might not perform properly. Any resulting damage would not be covered by your vehicle's warranty.**

## Engine Coolant Heater

Your vehicle may have an engine coolant heater. In very cold weather, 0°F (–18°C) or colder, the engine coolant heater can help. You will get easier starting and better fuel economy during engine warm-up. Usually, the coolant heater should be plugged in a minimum of four hours prior to starting your vehicle. At temperatures above 32°F (0°C), use of the coolant heater is not required.

### To Use the Engine Coolant Heater

1. Turn off the engine.
2. Open the hood and unwrap the electrical cord. The cord is located on the driver's side of the engine compartment, near the battery.
3. Plug it into a normal, grounded 110-Volt AC outlet.

## ⚠ CAUTION:

**Plugging the cord into an ungrounded outlet could cause an electrical shock. Also, the wrong kind of extension cord could overheat and cause a fire. You could be seriously injured. Plug the cord into a properly grounded three-prong 110-volt AC outlet. If the cord will not reach, use a heavy-duty three-prong extension cord rated for at least 15 amps.**

4. Before starting the engine, be sure to unplug and store the cord as it was before to keep it away from moving engine parts. If you do not, it could be damaged.

How long should you keep the coolant heater plugged in? The answer depends on the outside temperature, the kind of oil you have, and some other things. Instead of trying to list everything here, we ask that you contact your dealer in the area where you will be parking your vehicle. The dealer can give you the best advice for that particular area.

## Automatic Transaxle Operation

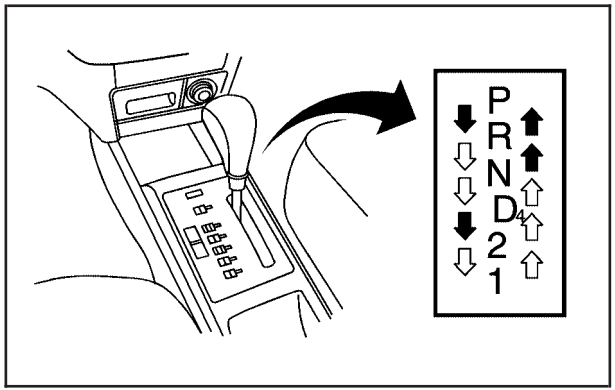


If your vehicle has an automatic transaxle, the shift lever is located on the console between the seats.

Movement between certain positions requires pushing the release button on the front of the shifter.

**PARK (P):** This position locks your front wheels. It is the best position to use when you start your engine because your vehicle cannot move easily.

## ⚠ CAUTION:

**It is dangerous to get out of your vehicle if the shift lever is not fully in PARK (P) with the parking brake firmly set. Your vehicle can roll.**

**Do not leave your vehicle when the engine is running unless you have to. If you have left the engine running, the vehicle can move suddenly. You or others could be injured. To be sure your vehicle will not move, even when you are on fairly level ground, always set your parking brake and move the shift lever to PARK (P). See *Shifting Into Park (P) (Automatic Transaxle) on page 118*.**

Ensure that the shift lever is fully in PARK (P) before starting the engine. Your vehicle has an automatic transaxle shift lock control system.

You have to apply your regular brakes before you can shift from PARK (P) when the key is in ON. If you cannot shift out of PARK (P) while holding the brake pedal down, see *Shifting Out of Park (P) on page 119*.

**REVERSE (R):** Use this gear to back up.

When shifting from NEUTRAL (N) to REVERSE (R), you need to apply the regular brake and push the release button on the front of the shifter and then forward.

***Notice:*** **Shifting to REVERSE (R) while your vehicle is moving forward could damage the transaxle. The repairs would not be covered by your warranty. Shift to REVERSE (R) only after your vehicle is stopped.**

To rock your vehicle back and forth to get out of snow, ice or sand without damaging your transaxle, see *If Your Vehicle is Stuck in Sand, Mud, Ice, or Snow on page 247*.

**NEUTRAL (N):** In this position, your engine does not connect with the wheels. To restart while you are already moving, use NEUTRAL (N) only. Also, use NEUTRAL (N) when your vehicle is being towed.

## ⚠ CAUTION:

**Shifting into a drive gear while your engine is running at high speed is dangerous. Unless your foot is firmly on the brake pedal, your vehicle could move very rapidly. You could lose control and hit people or objects. Do not shift into a drive gear while your engine is running at high speed.**

***Notice:*** **Shifting out of PARK (P) or NEUTRAL (N) while the engine is running at high speed may damage the transaxle. The repairs would not be covered by your warranty. Be sure the engine is not running at high speeds when shifting your vehicle.**

**AUTOMATIC OVERDRIVE (D4):** This position is for normal driving.

When operating your vehicle in severe cold conditions, the transaxle may be prevented from shifting into D4 gear until the transaxle fluid has warmed up to it's operational temperature.

***Notice:*** **If your vehicle seems to start up rather slowly or not shift gears when you go faster, and you continue to drive your vehicle that way, you could damage the transaxle. Have your vehicle serviced right away. You can drive in SECOND (2) when you are driving less than 35 mph (55 km/h) and AUTOMATIC OVERDRIVE (D4) for higher speeds until then.**

**SECOND (2):** This position gives you more power but lower fuel economy. You can use SECOND (2) on hills. It can help control your speed as you go down steep mountain roads, but then you would also want to use your brakes off and on.

***Notice:*** **Do not drive in SECOND (2) at speeds over 65 mph (105 km/h), or you can damage the transaxle. Use AUTOMATIC OVERDRIVE (D4) as much as possible. Do not shift into SECOND (2) unless you are going slower than 65 mph (105 km/h) or you can damage your engine.**

**FIRST (1):** This position gives you even more power but lower fuel economy than SECOND (2). You can use it on very steep hills, or in deep snow or mud. If the shift lever is put in FIRST (1), the transaxle will not shift into first gear until the vehicle is going slowly enough.

***Notice:*** **Spinning the tires or holding the vehicle in one place on a hill using only the accelerator pedal may damage the transaxle. If you are stuck, do not spin the tires. When stopping on a hill, use the brakes, or parking brake to hold the vehicle in place.**

If there is a malfunction with the automatic transaxle, the malfunction indicator lamp (MIL) or the HOLD indicator light will turn on or flash. See *Malfunction Indicator Lamp on page 181* or *Hold Mode Light on page 181*.

Have your vehicle fixed as soon as possible.

## Hold Mode

If your vehicle's transaxle has hold mode, you can select this mode to drive with some characteristics of a manual transaxle. With hold mode turned on, the automatic transaxle will stay in a specific gear range.

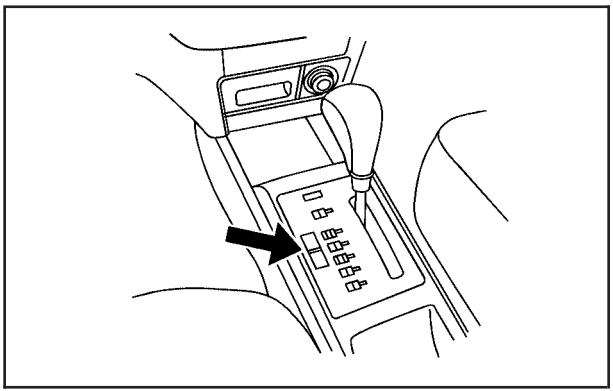

Press the HOLD button on the shift lever console to turn on hold mode. Press the button again to turn off hold mode, and return to normal automatic transaxle operation.

For the Hatchback, the HOLD light will light up on the secondary information center. For the Sedan, the HOLD light will light up on the instrument panel cluster. See *Hold Mode Light on page 181*.

When hold mode is activated, the transaxle is fixed in the gear selected.

## Hold Mode Features

### Winter Function

Select hold mode while in AUTOMATIC OVERDRIVE (D4) to help the vehicle maintain traction on slippery road surfaces, such as snow, mud, or ice.

### Manually Controlling Shift

Select hold mode to use your automatic transaxle like a three-speed manual transaxle.

# Manual Transaxle Operation

## Five-Speed

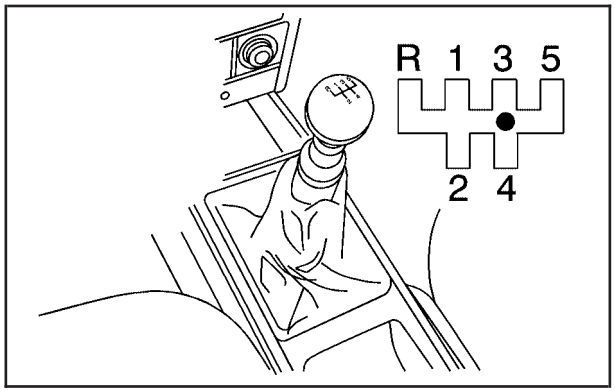


This is your shift pattern.

Here is how to operate your manual transaxle:

**FIRST (1):** Press the clutch pedal and shift into FIRST (1). Then, slowly let up on the clutch pedal as you press the accelerator pedal.

You can shift into FIRST (1) when you are going less than 20 mph (32 km/h). If you have come to a complete stop and it is hard to shift into FIRST (1), put the shift lever in NEUTRAL and let up on the clutch. Press the clutch pedal back down. Then shift into FIRST (1).

**SECOND (2):** Press the clutch pedal as you let up on the accelerator pedal and shift into SECOND (2). Then, slowly let up on the clutch pedal as you press the accelerator pedal.

**THIRD (3), FOURTH (4) and FIFTH (5):** Shift into THIRD (3), FOURTH (4) and FIFTH (5), the same way you do for SECOND (2). Slowly let up on the clutch pedal as you press the accelerator pedal.

To stop, let up on the accelerator pedal and press the brake pedal. Just before the vehicle stops, press the clutch pedal and the brake pedal, and shift to NEUTRAL.

**NEUTRAL:** Use this position when you start or idle your engine.

**REVERSE (R):** To back up, press down the clutch pedal, lift up the ring on the shift lever and shift into REVERSE (R). Let up on the clutch pedal slowly while pressing the accelerator pedal.

***Notice:*** **Shifting to REVERSE (R) while your vehicle is moving forward could damage the transaxle. The repairs would not be covered by your warranty. Shift to REVERSE (R) only after your vehicle is stopped.**

Also, use REVERSE (R), along with the parking brake, for parking your vehicle.

## Shift Speeds

### ⚠ CAUTION:

**If you skip a gear when you downshift, you could lose control of your vehicle. You could injure yourself or others. Do not shift down more than one gear at a time when you downshift.**

## Parking Brake

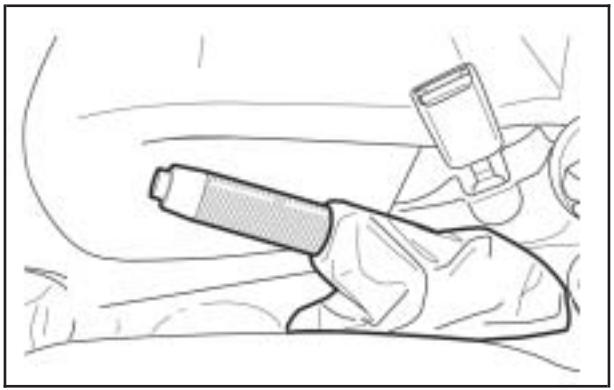

The parking brake lever is located between the bucket seats.

To set the parking brake, hold the brake pedal down and pull up on the parking brake lever. If the ignition is on, the brake system warning light will come on. See *Brake System Warning Light on page 164*.

To release the parking brake, hold the brake pedal down. Pull the parking brake lever up until you can press the release button. Hold the release button in as you move the brake lever all the way down.

***Notice:*** **Driving with the parking brake on can overheat the brake system and cause premature wear or damage to brake system parts. Verify that the parking brake is fully released and the brake warning light is off before driving.**

## Shifting Into Park (P) (Automatic Transaxle)

**⚠ CAUTION:**

**It can be dangerous to get out of your vehicle if the shift lever is not fully in PARK (P) with the parking brake firmly set. Your vehicle can roll. If you have left the engine running, the vehicle can move suddenly. You or others could be injured. To be sure your vehicle will not move, even when you are on fairly level ground, use the steps that follow.**

1. Hold the brake pedal down and set the parking brake.
2. Move the shift lever into PARK (P) by pushing the release button on the front of the shfiter.
3. Turn the ignition to LOCK.
4. Remove the key and take it with you. If you can leave your vehicle with the ignition key in your hand, your vehicle is in PARK (P).

## Leaving Your Vehicle With the Engine Running (Automatic Transaxle)

**⚠ CAUTION:**

**It can be dangerous to leave your vehicle with the engine running. Your vehicle could move suddenly if the shift lever is not fully in PARK (P) with the parking brake firmly set. And, if you leave the vehicle with the engine running, it could overheat and even catch fire. You or others could be injured. Do not leave your vehicle with the engine running.**

If you have to leave your vehicle with the engine running, be sure your vehicle is in PARK (P) and your parking brake is firmly set before you leave it. After you have moved the shift lever into PARK (P), hold the regular brake pedal down. Then, see if you can move the shift lever away from PARK (P). If you can, it means that the shift lever was not fully locked into PARK (P).

## Torque Lock (Automatic Transaxle)

If you are parking on a hill and you do not shift your transaxle into PARK (P) properly, the weight of the vehicle may put too much force on the parking pawl in the transaxle. You may find it difficult to pull the shift lever out of PARK (P). This is called “torque lock.” To prevent torque lock, set the parking brake and then shift into PARK (P) properly before you leave the driver’s seat. To find out how, see *Shifting Into Park (P) (Automatic Transaxle) on page 118*.

When you are ready to drive, move the shift lever out of PARK (P) *before* you release the parking brake.

If torque lock does occur, you may need to have another vehicle push yours a little uphill to take some of the pressure from the parking pawl in the transaxle, so you can pull the shift lever out of PARK (P).

## Shifting Out of Park (P)

Your automatic transaxle vehicle has an automatic transaxle shift-lock control system. You have to fully apply your regular brakes before you can shift from PARK (P) when the ignition is turned to ON. See *Automatic Transaxle Operation on page 111*.

If you cannot shift out of PARK (P) while holding the brake pedal down, try this:

1. Set the parking brake.
2. Turn the ignition off and remove the key.
3. Remove the cover over the shift-lock release slot by prying it off using a small, flat object. The shift-lock release slot is located at the top of the shift lever.

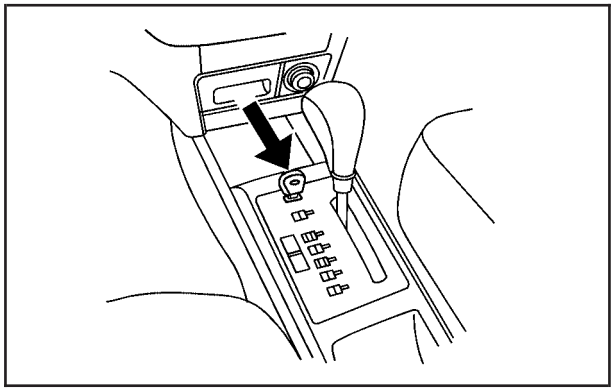

4. Insert the key into the shift-lock release slot and press and hold the key.
5. Shift to NEUTRAL (N).
6. Remove the key from the shift-lock release slot, insert the key into the ignition and start the engine.
7. Replace the shift-lock release slot cover.
8. Apply and hold the regular brake fully and release the parking brake.
9. Shift to the gear you want.
10. Have the system fixed as soon as you can.

## Parking Your Vehicle (Manual Transaxle)

Before leaving your vehicle, do the following:

1. Hold the brake pedal down and firmly apply the parking brake.
2. Fully press in the clutch pedal and place the shift lever into the gear position as stated below:
   - When parking on level ground, place the shift lever into NEUTRAL.
   - When parking downhill, place the shift lever in REVERSE (R).
   - When parking uphill, place the shift lever in FIRST (1).
3. After shifting, turn the ignition to LOCK, remove the key and release the clutch.

## Parking Over Things That Burn

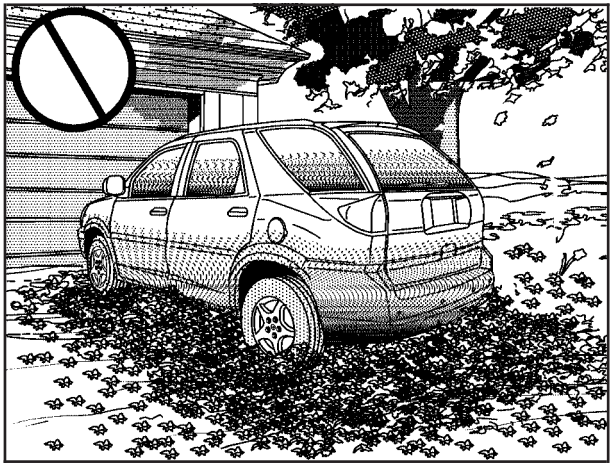

**⚠ CAUTION:**

**Things that can burn could touch hot exhaust parts under your vehicle and ignite. Do not park over papers, leaves, dry grass, or other things that can burn.**

## Engine Exhaust

**⚠ CAUTION:**

**Engine exhaust can kill. It contains the gas carbon monoxide (CO), which you cannot see or smell. It can cause unconsciousness and death.**

**You might have exhaust coming in if:**

- **Your exhaust system sounds strange or different.**
- **Your vehicle gets rusty underneath.**
- **Your vehicle was damaged in a collision.**
- **Your vehicle was damaged when driving over high points on the road or over road debris.**

**CAUTION: (Continued)**

**CAUTION: (Continued)**

- **Repairs were not done correctly.**
- **Your vehicle or exhaust system has been modified improperly.**

**If you ever suspect exhaust is coming into your vehicle:**

- **Drive it only with all the windows down to blow out any CO; and**
- **Have your vehicle fixed immediately.**

## Running the Engine While Parked

It is better not to park with the engine running. But if you ever have to, here are some things to know.

**⚠ CAUTION:**

**Idling the engine with the climate control system off could allow dangerous exhaust into your vehicle. See the earlier caution under *Engine Exhaust on page 122*.**

**Also, idling in a closed-in place can let deadly carbon monoxide (CO) into your vehicle even if the climate control fan is at the highest setting. One place this can happen is a garage. Exhaust — with CO — can come in easily. NEVER park in a garage with the engine running.**

**Another closed-in place can be a blizzard. See *Winter Driving on page 242*.**

**⚠ CAUTION:**

**It can be dangerous to get out of your vehicle if the automatic transaxle shift lever is not fully in PARK (P) with the parking brake firmly set. Your vehicle can roll. Do not leave your vehicle when the engine is running unless you have to. If you have left the engine running, the vehicle can move suddenly. You or others could be injured. To be sure your vehicle will not move, even when it is on fairly level ground, always set the parking brake and move the automatic transaxle shift lever to PARK (P), or the manual transaxle shift lever to NEUTRAL.**

Follow the proper steps to be sure your vehicle will not move. If you have an automatic transaxle, see *Shifting Into Park (P) (Automatic Transaxle) on page 118*.

# Mirrors

## Manual Rearview Mirror

While sitting in a comfortable driving position, adjust the mirror so you can see clearly behind your vehicle. Grip the mirror in the center to move it up or down and side to side. The control at the bottom of the mirror is the day/night feature that allows adjustment to the mirror so that the glare of headlamps from behind is reduced. Push the control for daytime use; pull it for night use.

## Outside Manual Mirrors

The outside rearview mirrors should be adjusted so you can see a little of the side of your vehicle when you are sitting in a comfortable driving position.

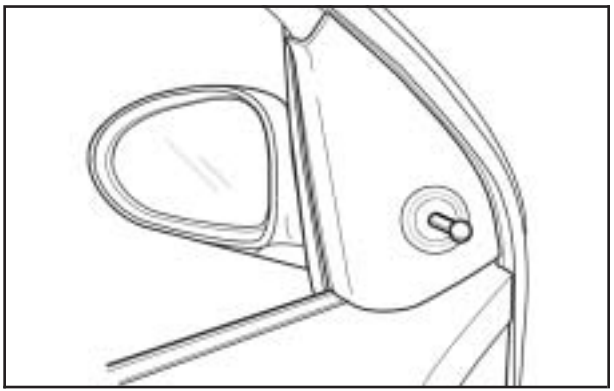

Adjust the outside manual mirrors using the control lever located next to the mirror.

The outside rearview mirrors can be folded flat against the side of the vehicle by pushing them toward the vehicle's doors.

## Outside Power Mirror

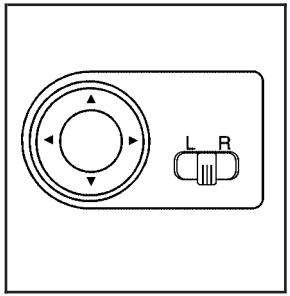


For sedan models, the control for the power mirrors is located on the instrument panel, left of the steering wheel.

To adjust the mirrors, do the following:

1. Select the mirror you want to adjust by moving the selector switch to L for the driver's side mirror or R for the passenger's side mirror.
2. To adjust the mirror, press the corresponding edges located on the four-way control pad to move the mirror in the direction that you want it to go - up, down, left or right. The ignition must be turned to ON to adjust the mirrors.

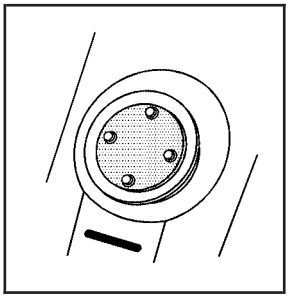

For hatchback models, the control for the power mirror is located on the driver's door panel, above the power window buttons.

1. Select the mirror you want to adjust by pressing the left side of the selector for the driver's side mirror or the right side for the passenger's side mirror.
2. To adjust each mirror, press the corresponding edges located on the four-way control pad to move the mirror in the direction that you want it to go. The ignition must be turned to ON to adjust the mirrors.

   The outside rearview mirrors can be folded flat against the side of the vehicle by pushing them toward the vehicle's doors.

## Outside Convex Mirror

**⚠ CAUTION:**

**A convex mirror can make things (like other vehicles) look farther away than they really are. If you cut too sharply into the right lane, you could hit a vehicle on your right. Check your inside mirror or glance over your shoulder before changing lanes.**

The passenger's side mirror is convex. A convex mirror's surface is curved so more can be seen from the driver's seat. It also makes things, like other vehicles, look farther away than they really are.

## Outside Heated Mirrors

If your vehicle has this feature, when you operate the rear window defogger, the heated driver's and passenger's outside power mirrors are warmed to help clear them of ice, snow, and condensation. See "Rear Window and Outside Mirror Defogger" under *Climate Control System on page 150* for more information.

# Storage Areas

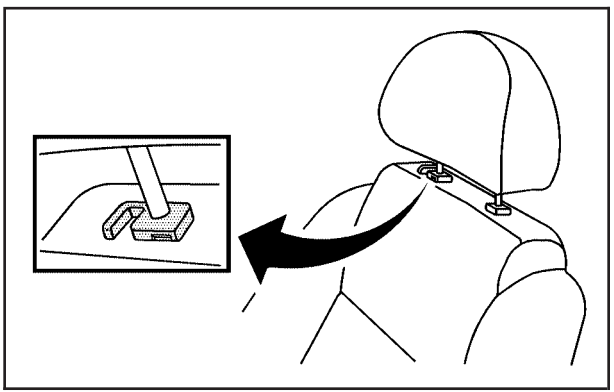

Your vehicle has shopping hooks on each front seatback for your convenience. Lift the headrest to access the hooks.

## Glove Box

Open the glove box by pulling the bottom of the handle upward.

## Cupholder(s)

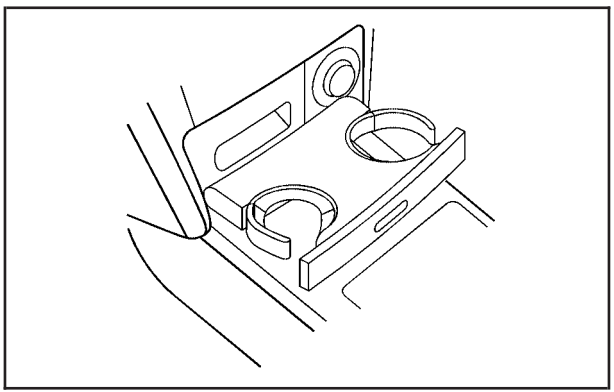

There are two cupholders located in the center instrument panel, below the climate control system. To use the cupholder, push in on its outer edge. Then pull out the cupholder. After use, push in the cupholder until it latches.

There is also a cupholder located in the rear of the center console.

## Sunglasses Storage Compartment

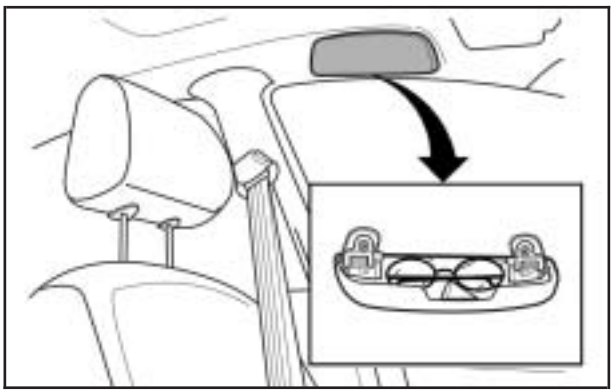

If your vehicle has this feature, the sunglasses storage compartment is located above the driver's door. To open, pull down and hold the upper part of the cover. To close the compartment, let go of the cover and the compartment will automatically close.

# Sunroof

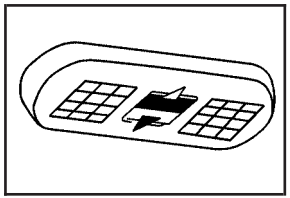

If the vehicle has this feature, the switch is located on the headliner between the sun visors.

The sunroof will only operate when the ignition is turned to ON. The sunroof can be opened to a vent position or it can be opened all of the way.

You must manually open and close the sunshade.

To open the sunroof to the vent position, open the sunshade. Then press and hold the driver's side of the switch. To close the sunroof, press and hold the passenger's side of the switch until the sunroof reaches the desired position.

To fully open the sunroof, open the sunshade. Then press and hold the passenger's side of the switch. To close the sunroof, press and hold the driver's side of the switch. The sunroof will stop if the switch is released during operation.

In both the vent and fully open positions, the air flow can be adjusted by pushing and holding the switch until the sunroof moves to the desired position.

The sunroof cannot be opened or closed if the vehicle has an electrical failure.

# Section 3 Instrument Panel

**Instrument Panel Overview** ..... 132
Hazard Warning Flashers ..... 135
Other Warning Devices ..... 136
Horn ..... 136
Tilt Wheel ..... 136
Turn Signal/Multifunction Lever ..... 137
Turn and Lane-Change Signals ..... 137
Headlamp High/Low-Beam Changer ..... 138
Flash-to-Pass ..... 138
Windshield Wipers ..... 138
Windshield Washer ..... 140
Rear Window Wiper/Washer (Hatchback) .... 140
Cruise Control ..... 141
Exterior Lamps ..... 145
Headlamps on Reminder ..... 145
Daytime Running Lamps (DRL) ..... 146
Fog Lamps ..... 147
Instrument Panel Brightness ..... 147
Dome Lamp ..... 148
Inadvertent Power Battery Saver ..... 148
Accessory Power Outlet(s) ..... 148
Ashtray(s) and Cigarette Lighter ..... 149
Clock ..... 150

**Climate Controls** ..... 150
Climate Control System ..... 150
Outlet Adjustment ..... 154
Passenger Compartment Air Filter ..... 155

**Warning Lights, Gages, and Indicators** ..... 157
Instrument Panel Cluster ..... 158
Speedometer and Odometer ..... 160
Trip Odometer ..... 160
Tachometer ..... 160
Safety Belt Reminder Light ..... 161
Safety Belt Reminder Tone ..... 161
Airbag Readiness Light ..... 161
Passenger Airbag Status Indicator ..... 162
Charging System Light ..... 164
Brake System Warning Light ..... 164
Anti-Lock Brake System Warning Light ..... 165
Hold Mode Light ..... 166
Engine Coolant Temperature Gage ..... 167
Malfunction Indicator Lamp ..... 168
Oil Pressure Light ..... 171
Fog Lamp Light ..... 172
Cruise Control Light ..... 172
Highbeam On Light ..... 172

Daytime Running Lamps (DRL) Indicator Light ..... 172
Door Ajar Light ..... 173
Fuel Gage ..... 173
Low Fuel Warning Light ..... 174
**Secondary Information Center (SIC)** ..... 175
Secondary Information Center (SIC) (Hatchback Only) ..... 175
Clock (Hatchback Only) ..... 176
Safety Belt Reminder Light ..... 176
Airbag Readiness Light ..... 176
Passenger Airbag Status Indicator (Hatchback) ..... 178
Charging System Light ..... 180
Anti-Lock Brake System Warning Light ..... 180
Hold Mode Light ..... 181
Malfunction Indicator Lamp ..... 181
Oil Pressure Light ..... 185
Fog Lamp Light ..... 186
Door Ajar Light ..... 186
**Audio System(s)** ..... 186
AM-FM Radio (Single Display, Base Level) ..... 188
AM-FM Radio (Double Display, Base Level) ..... 190
Radio with CD (MP3/WMA) ..... 194
Radio with Six-Disc CD (MP3/WMA) ..... 201
Using an MP3 (Radio with CD Player) ..... 208
Using an MP3 (Radio with Six-Disc Player) ..... 212
Audio Steering Wheel Controls ..... 216
Radio Reception ..... 217
Care of Your CDs ..... 217
Care of the CD Player ..... 217
Fixed Mast Antenna (Hatchback) ..... 218
Backglass Antenna (Sedan) ..... 218

# NOTES

# Instrument Panel Overview

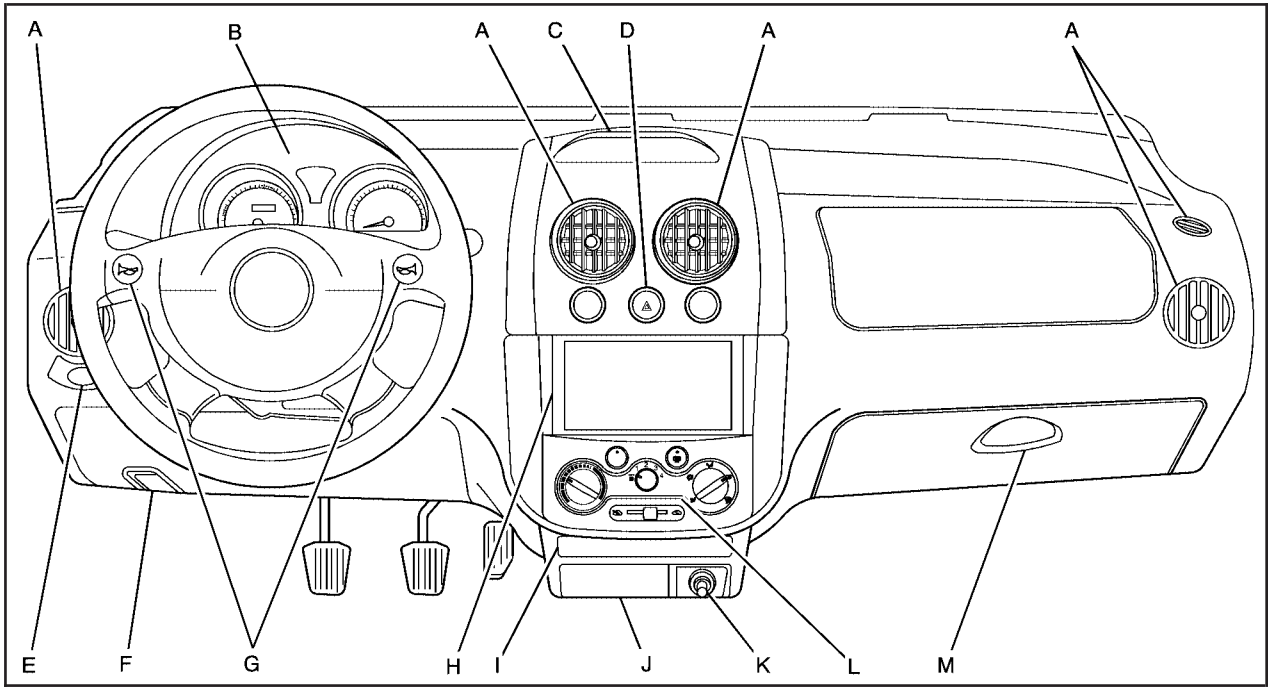


**United States Hatchback shown, Canada Hatchback similar**

The main components of your instrument panel are the following:

A. Air Outlet. See *Outlet Adjustment on page 154*.

B. Instrument Panel Cluster. See *Instrument Panel Cluster on page 158*.

C. Digital Clock and Secondary Information Center. See *Clock on page 150* and *Secondary Information Center (SIC) (Hatchback Only) on page 175*.

D. Hazard Warning Flashers Button. See *Hazard Warning Flashers on page 135*.

E. Instrument Panel Brightness Control. See *Instrument Panel Brightness on page 147*.

F. Hood Release. See *Hood Release on page 274*.

G. Horn. See *Horn on page 136*.

H. Audio System. See *Audio System(s) on page 186*.

I. Cupholder. See *Cupholder(s) on page 127*.

J. Ashtray. See *Ashtray(s) and Cigarette Lighter on page 149*.

K. Cigarette Lighter. See *Ashtray(s) and Cigarette Lighter on page 149*.

L. Climate Control System. See *Climate Control System on page 150*.

M. Glove Box. See *Glove Box on page 127*.

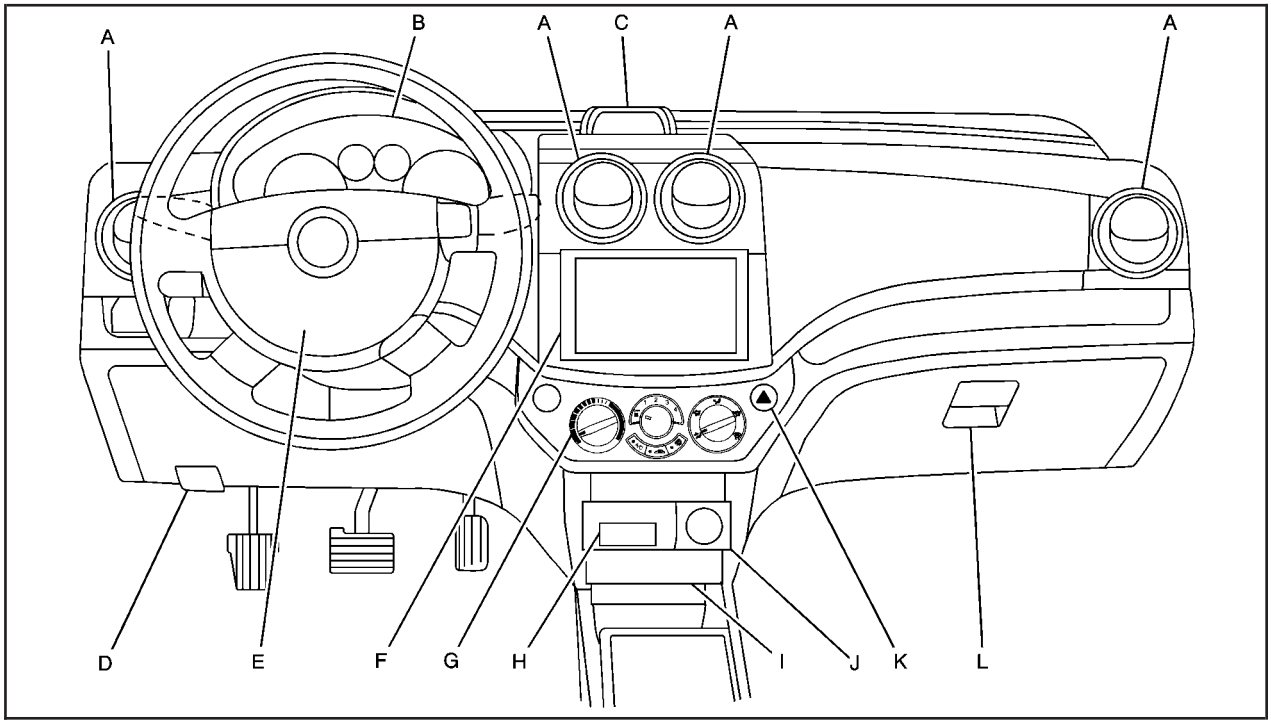


**United States Sedan Shown, Canada Sedan similar**

The main components of your instrument panel are the following:

A. Air Outlet. See *Outlet Adjustment on page 154*.

B. Instrument Panel Cluster. See *Instrument Panel Cluster on page 158*.

C. Digital Clock. See *Clock on page 150*.

D. Hood Release. See *Hood Release on page 274*.

E. Horn. See *Horn on page 136*.

F. Audio System. See *Audio System(s) on page 186*.

G. Climate Control System. See *Climate Control System on page 150*.

H. Ashtray. See *Ashtray(s) and Cigarette Lighter on page 149*.

I. Cupholder. See *Cupholder(s) on page 127*.

J. Cigarette Lighter. See *Ashtray(s) and Cigarette Lighter on page 149*.

K. Hazard Warning Flashers Button. See *Hazard Warning Flashers on page 135*.

L. Glove Box. See *Glove Box on page 127*.

## Hazard Warning Flashers

Your hazard warning flashers let you warn others. They also let police know you have a problem. Your front and rear turn signal lamps will flash on and off.

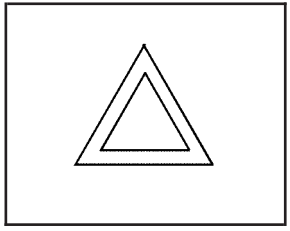

The hazard warning flasher button is located in the center of the instrument panel on the sedan. It is located to the right of the climate control system on the hatchback.

Your hazard warning flashers work no matter what position your key is in, and even if the key is not in the ignition switch.

Press the button to make the front and rear turn signal lamps flash on and off. Press the button again to turn the flashers off.

When the hazard warning flashers are on, your turn signals will not work.

## Other Warning Devices

If you carry reflective triangles, you can set them up at the side of the road about 300 feet (100 m) behind your vehicle.

## Horn

Press near or on the horn symbols on your steering wheel pad to sound the horn.

## Tilt Wheel

Your vehicle has a tilt wheel which allows you to adjust the steering wheel before you drive. You can raise it to the highest level to give your legs more room when you exit and enter the vehicle.

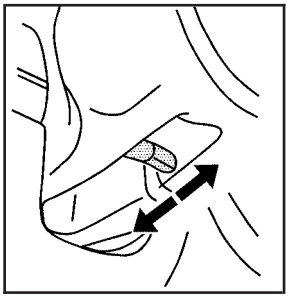

The tilt wheel lever is located underneath the steering column slightly to the left.

To tilt the steering wheel, hold the wheel and push the lever down. Then, move the wheel to a comfortable position and pull the lever up to lock the wheel in place.

## Turn Signal/Multifunction Lever

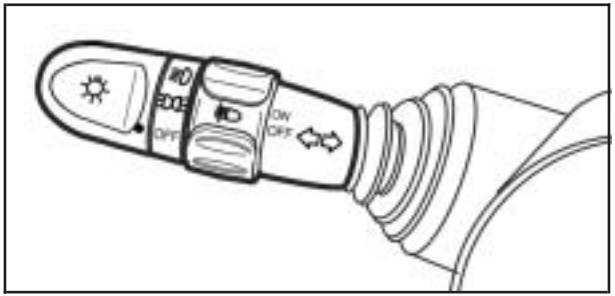


**Uplevel shown, Base similar**

The lever on the left side of the steering column includes the following:

- ⇦⇨ Turn and Lane-Change Signals. See *Turn and Lane-Change Signals on page 137*.
- Headlamp High/Low-Beam Changer. See *Headlamp High/Low-Beam Changer on page 138*.
- Flash-to-Pass. See *Flash-to-Pass on page 138*.
- ☼ Exterior Light Control. See *Exterior Lamps on page 145*.
- Fog Lamps, if equipped. See *Fog Lamps on page 147*.

## Turn and Lane-Change Signals

The turn signal has two upward (for right) and two downward (for left) positions. These positions allow you to signal a turn or a lane change.

To signal a turn, move the lever all the way up or down. When the turn is finished, the lever will return automatically.

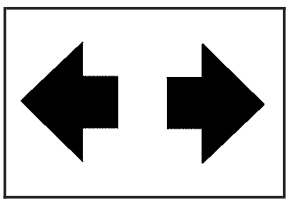

An arrow on the instrument panel cluster will flash in the direction of the turn or lane change.

To signal a lane change, just raise or lower the lever until the arrow starts to flash. Hold it there until you complete your lane change. The lever will return by itself when you release it.

As you signal a turn or a lane change, if the arrows flash rapidly, a signal bulb may be burned out and other drivers will not see your turn signal.

If a bulb is burned out, replace it to help avoid an accident. If the arrows do not go on at all when you signal a turn, check for burned-out bulbs and then check the fuse. See *Fuses and Circuit Breakers on page 356*.

## Headlamp High/Low-Beam Changer

To change the headlamps from low beam to high beam, push the turn signal/multifunction lever away from you.

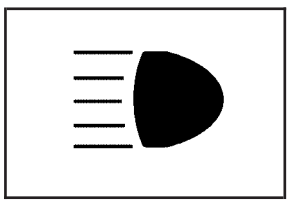

When the high beams are on, this light on the instrument panel cluster also will be on if the ignition is turned to ON.

To change the headlamps from high beam to low beam, pull the turn signal lever toward you.

## Flash-to-Pass

This feature lets you use your high-beam headlamps to signal a driver in front of you that you want to pass.

To use it, pull the turn signal/multifunction lever toward you until the high-beam headlamps come on, then release the lever to turn them off.

## Windshield Wipers

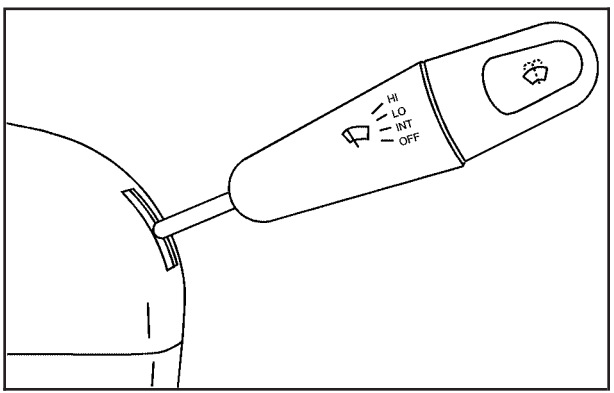


**Sedan shown, Hatchback similar**

Use this lever located on the right side of the steering wheel to operate the windshield wipers. The ignition must be turned to ON to operate the windshield wipers.

**HI (High Speed):** Move the lever to this position for wiping at high speed.

**LO (Low Speed):** Move the lever to this position for steady wiping at low speed.

**INT (Intermittent):** Move the lever to this position to choose a delayed wiping cycle.

**OFF:** Move the lever to this position to turn off the windshield wipers.

## Misting Function

Move the lever toward INT for a single wiping cycle. Hold it there until the windshield wipers start; then let go. The windshield wipers will stop after one wipe. If you want more wipes, hold the band toward INT longer.

Remember that damaged wiper blades may prevent you from seeing well enough to drive safely. To avoid damage, be sure to clear ice and snow from the wiper blades before using them.

If they are frozen to the windshield, carefully loosen or thaw them. If your blades do become damaged, get new blades or blade inserts.

Heavy snow or ice can overload your wiper motor. A circuit breaker will stop the motor until it cools. Clear away snow or ice to prevent an overload.

## Windshield Washer

To wash your windshield, pull the windshield washer/wiper lever toward you with the ignition turned to ON.

**⚠ CAUTION:**

**In freezing weather, do not use your washer until the windshield is warmed. Otherwise the washer fluid can form ice on the windshield, blocking your vision.**

When you release the lever, the washers will stop, but the wipers will continue to wipe for several cycles and will either stop or will resume at the speed you were using before.

## Rear Window Wiper/Washer (Hatchback)

**⚠ CAUTION:**

**In freezing weather, do not use your washer until the windshield is warmed. Otherwise the washer fluid can form ice on the windshield, blocking your vision.**

Your vehicle may have a rear window washer/wiper. Operate the rear window washer/wiper system by pushing the windshield washer/wiper lever away from you. The wiper operates intermittently when the lever is in the first position. Washer fluid sprays onto the rear window and the wiper operates continuously when the lever is pushed to the second position.

The rear window washer uses the same fluid bottle as the windshield washer. However, the rear window washer will run out of fluid before the windshield washer. If you can wash your windshield but not your rear window, check the fluid level.

## Cruise Control

If your vehicle has cruise control, you can maintain a speed of about 24 mph (39 km/h) or more without keeping your foot on the accelerator. This can really help on long trips. Cruise control does not work at speeds below 24 mph (39 km/h).

When you apply your brakes, or the clutch pedal if you have a manual transaxle, the cruise control turns off.

**⚠ CAUTION:**

**Cruise control can be dangerous where you cannot drive safely at a steady speed. So, do not use your cruise control on winding roads or in heavy traffic.**

**Cruise control can be dangerous on slippery roads. On such roads, fast changes in tire traction can cause excessive wheel slip, and you could lose control. Do not use cruise control on slippery roads.**

## Setting Cruise Control

### ⚠ CAUTION:

**If you leave your cruise control on when you are not using cruise, you might hit a button and go into cruise when you do not want to. You could be startled and even lose control. Keep the cruise control switch off until you want to use cruise control.**

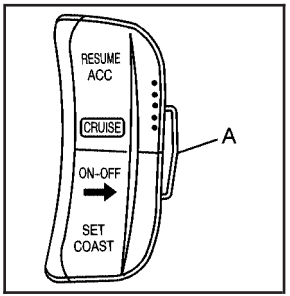


The cruise control pad is located on the right side of the steering wheel.

1. Press the ON-OFF button (A) to turn cruise control on.
2. Accelerate to the speed you want.
3. Press the SET button and release it. The cruise control light will come on in the instrument panel cluster to show that the cruise control is on.
4. Take your foot off the accelerate pedal.

## Resuming a Set Speed

Suppose you set your cruise control at a desired speed and then you apply the brake pedal, or the clutch pedal if you have a manual transaxle. This, of course, shuts off the cruise control. But you do not need to reset it. Once you are going about 24 mph (39 km/h) or more, you can briefly press the RESUME button.

You will go right back up to your chosen speed and stay there.

If you hold in the RESUME button longer, the vehicle will keep going faster until you release the button or apply the brake pedal. So unless you want to go faster, do not hold in the RESUME button.

## Increasing Speed While Using Cruise Control

There are two ways to go to a higher speed.

- Use the accelerator pedal to get to a higher speed. Press the SET button, then release the button and the accelerator pedal. You will now cruise at the higher speed.
- Press the RESUME button. Hold it there until you get up to the speed you want, and then release the button. To increase your speed in very small amounts, briefly press the RESUME button and then release it. Each time you do this, your vehicle will go about 1 mph (1.6 km/h) faster.

The accelerate feature will only work after you turn on the cruise control by pressing the SET button.

## Reducing Speed While Using Cruise Control

There are two ways to reduce your speed while using cruise control:

- Press the SET button until you reach the lower speed you want, then release it.
- To slow down in very small amounts, briefly press the SET button. Each time you do this, you will go about 1 mph (1.6 km/h) slower.

## Passing Another Vehicle While Using Cruise Control

Use the accelerator pedal to increase your speed. When you take your foot off the pedal, your vehicle will slow down to the cruise control speed you set earlier.

## Using Cruise Control on Hills

How well your cruise control will work on hills depends upon your speed, load and the steepness of the hills. When going up steep hills, you may have to step on the accelerator pedal to maintain your speed. When going downhill, you may have to brake or shift to a lower gear to keep your speed down. Of course, applying the brake pedal takes you out of cruise control. Many drivers find this to be too much trouble and do not use cruise control on steep hills.

## Ending Cruise Control

There are two ways to turn off the cruise control:

- Step lightly on the brake pedal, or press the clutch pedal, if you have a manual transaxle.
- Press the ON OFF button on the cruise control pad.

## Erasing Speed Memory

When you turn off the cruise control or the ignition, your cruise control set speed memory is erased.

## Exterior Lamps

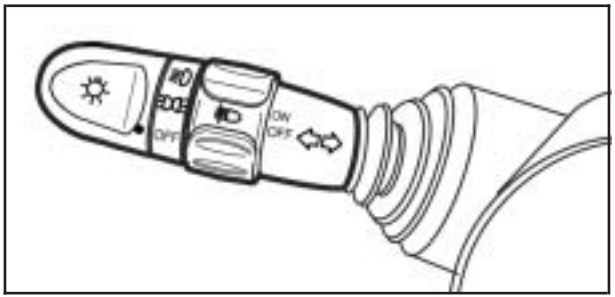


**Uplevel shown, Base similar**

The lever on the left side of the steering column operates the exterior lamps.

The exterior lamp band has three positions:

**(Headlamps):** Turn the band to this position to turn on the headlamps, together with the following:

- Taillamps
- License Plate Lamp
- Instrument Panel Lights
- Parking Lamps

The headlamps will automatically turn off when the ignition key is turned to lock or accessory.

**(Parking Lamps):** Turn the band to this position to turn on the parking lamps, together with the taillamps, license plate lamp, and instrument panel lights.

**OFF:** Turn the band to this position to turn all lamps off, except the Daytime Running Lamps (DRL).

## Headlamps on Reminder

If you open the driver's door with the ignition turned to LOCK or ACC while leaving the lamps on, you will hear a warning chime.

## Daytime Running Lamps (DRL)

Daytime Running Lamps (DRL) can make it easier for others to see the front of your vehicle during the day. DRL can be helpful in many different driving conditions, but they can be especially helpful in the short periods after dawn and before sunset. Fully functional daytime running lamps are required on all vehicles first sold in Canada.

The DRL system will make your low-beam headlamps come on when the following conditions are met:

- The ignition is on.
- The exterior lamp band is in OFF or in the parking lamp position.
- The parking brake is released.

An indicator light on instrument panel cluster will come on when the DRL system is on.

When the DRL system is on, the taillamps, sidemarker lamps, parking lamps and instrument panel lights will not be illuminated unless you have turned the exterior lamps control to the parking lamp or headlamp position.

The DRL system will turn off when one of the following conditions are met:

- The ignition is off.
- The parking brake is on.
- The high-beam headlamps are on.
- The low-beam headlamps are on.
- The flash-to-pass feature is used.

As with any vehicle, you should turn on the regular headlamp system when you need it.

## Fog Lamps

If your vehicle has fog lamps, use them for better visibility in foggy or misty conditions. The band located on the middle of the turn signal/ multifunction lever controls the fog lamps.

While using the fog lamps, the ignition must be turned to ON and the low-beam headlamps or parking lamps must be on.

Turn the band to ON to turn the fog lamps on. An indicator light will come on in the secondary information center on the hatchback or in the instrument panel cluster on the sedan, when the fog lamps are on. See *Fog Lamp Light on page 186*.

Turn the band to OFF to turn the fog lamps off. The fog lamps will also turn off when the high-beam headlamps are turned on. When the high-beam headlamps are turned off, the fog lamps will turn on again.

Some localities have laws that require the headlamps to be on along with the fog lamps.

## Instrument Panel Brightness

This feature controls the brightness of the instrument panel lights.

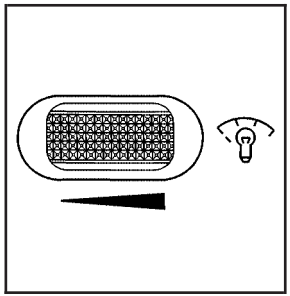

**Hatchback**

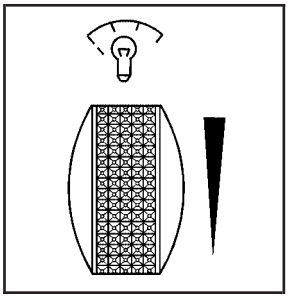

**Sedan**

The thumbwheel for this feature is located on the instrument panel to the left of the steering column. Turn the thumbwheel to brighten or dim the lights.

## Dome Lamp

Your vehicle will have one of the following dome lamp switches.

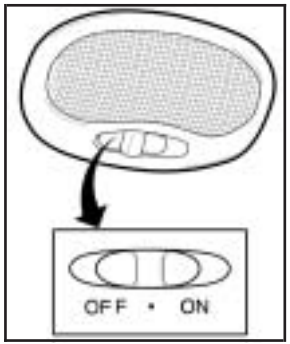


**Without Sunroof**

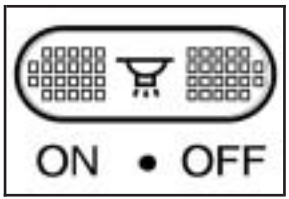


**With Sunroof**

The switches have three positions.

**ON:** The light comes on and stays on.

● **(Door):** The light comes on when a door is opened. The light turns off when all the doors are closed.

**OFF:** The light remains off even when a door is opened.

## Inadvertent Power Battery Saver

This feature is designed to protect your vehicle's battery against drainage from the taillamps, license plate lamp, instrument panel lights and parking lamps. When the ignition is turned off, the power to these features will automatically turn off after 5 seconds once the driver's door is closed.

## Accessory Power Outlet(s)

With the accessory power outlet, you can plug in auxiliary electrical equipment such as a cellular telephone or CB radio.

The accessory power outlet is located next to the parking brake on the center console.

To use the outlet, remove the protective cap. When not in use, always cover the outlet with the protective cap. The accessory power outlet is operational when the ignition is turned to ACC or ON.

***Notice:*** **Leaving electrical equipment on for extended periods will drain the battery. Always turn off electrical equipment when not in use and do not plug in equipment that exceeds the maximum amperage rating.**

Certain electrical accessories may not be compatible with the accessory power outlet and could result in blown vehicle or adapter fuses. If you experience a problem, see your dealer for additional information on accessory power outlets.

***Notice:*** **Adding any electrical equipment to your vehicle may damage it or keep other components from working as they should. The repairs would not be covered by your warranty. Do not use equipment exceeding maximum amperage rating of 20 amperes. Check with your dealer before adding electrical equipment.**

When adding electrical equipment, be sure to follow the proper installation instructions included with the equipment.

***Notice:*** **Improper use of the power outlet can cause damage not covered by your warranty. Do not hang any type of accessory or accessory bracket from the plug because the power outlets are designed for accessory power plugs only.**

## Ashtray(s) and Cigarette Lighter

The ashtray is located at the lower part of the center instrument panel. To remove the front ashtray for cleaning, open the ashtray fully, press in the retaining tab and pull the bin out.

***Notice:*** **If you put papers, pins, or other flammable items in the ashtray, hot cigarettes or other smoking materials could ignite them and possibly damage your vehicle. Never put flammable items in the ashtray.**

The cigarette lighter is located to the right of the front ashtray. To use it, turn the ignition to ACC or ON, push the cigarette lighter in all the way and let go. When it is ready, it will pop back out by itself.

***Notice:*** **Holding a cigarette lighter in while it is heating will not allow the lighter to back away from the heating element when it is hot. Damage from overheating may occur to the lighter or heating element. Do not hold a cigarette lighter in while it is heating.**

## Clock

If you have a sedan there is a digital clock located in the center of the instrument panel, above the center air outlets. When the ignition is turned to ACC or ON, the time is displayed in the digital clock. There are three adjusting buttons for the digital clock:

**H (Hour):** To go forward one hour, press the H button once. To go forward more than one hour, press and hold the button until the correct hour is reached.

**M (Minute):** To go forward one minute, press the M button once. To go forward more than one minute, press and hold the button until the correct minute is reached.

**S (Set):** To reset the time to the nearest hour, press the S button.

For example, if the set button is pressed while the time is between 8:00 and 8:29, the display is set to 8:00. If this button is pressed while the time is between 8:30 and 8:59, the display is set to 9:00.

After disconnecting the battery or replacing the fuse, reset the clock.

If you have a hatchback there is a clock located in the Secondary Information Center (SIC), see *Secondary Information Center (SIC) (Hatchback Only) on page 175*.

# Climate Controls

## Climate Control System

With this system you can control the heating, cooling and ventilation for your vehicle.

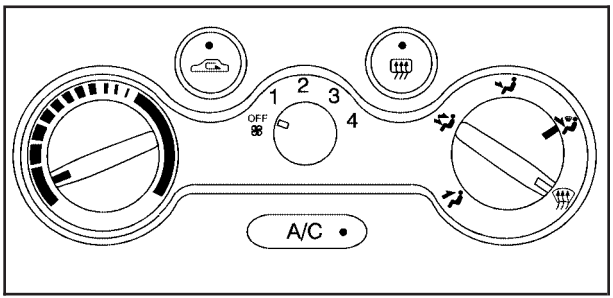


**Uplevel shown, Base similar, Hatchback only**

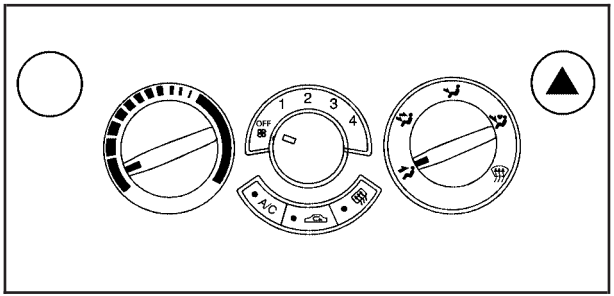


**Uplevel shown, Base similar, Sedan only**

**Temperature Control:** Turn the left knob clockwise or counterclockwise to manually increase or decrease the temperature inside your vehicle. Turn the knob to the blue area for cool air and to the red area for warm air.

**(Fan):** Turn the middle knob clockwise or counterclockwise to increase or decrease the fan speed. In any setting other than off, the fan will run continuously with the ignition on. The fan must be on in order for the air conditioning compressor to run.

To change the current mode, select one of the following from the right knob:

**(Vent):** This mode directs air to the instrument panel outlets.

**(Bi-Level):** This mode directs about half of the air to the instrument panel outlets, and then directs the remaining air to the floor outlets.

**(Floor):** This mode directs most of the air to the floor outlets. Some of the air will also be directed to the rear outlets. Be sure to keep the area under the front seats clear to allow the flow of air to the rear compartment.

The right knob can also be used to select the defog and defrost modes. Information on defogging and defrosting can be found later in this section.

**(Recirculation):** This mode keeps outside air from coming into the vehicle. It can be used to prevent outside air and odors from entering your vehicle or to help heat or cool the air inside your vehicle more quickly.

If your vehicle has a recirculation button (uplevel model), press the button to turn the recirculation mode on. When the button is pressed, an indicator light in the button will come on. Press the button again to return to outside air mode.

If your vehicle has a lever (base model), move the lever to choose the recirculation mode.

Using the recirculation mode for extended periods may cause your windows to fog. If this happens, select the defrost mode.

**(Outside Air):** This mode brings outside air into the vehicle.

If your vehicle has a recirculation button (uplevel model), press the button until the recirculation mode is turned off. Your vehicle will then return to outside air mode.

If your vehicle has a lever (base model), move the lever to choose the outside air mode.

**A/C (Air Conditioning):** If your vehicle has air conditioning, follow these steps to use the system. Start the engine and set the fan control knob to the desired speed.

The air conditioning compressor does not operate when the fan control knob is in the off position. Press the A/C button to turn the air conditioning compressor on and off. When the A/C button is pressed, an indicator light in the button will come on to let you know that air conditioning is activated.

On hot days, open the windows to let hot inside air escape; then close them. This helps to reduce the time it takes for your vehicle to cool down. It also helps the system to operate more efficiently.

For quick cool down on hot days, do the following:

1. Select the vent mode.
2. Select the highest fan speed.
3. Press the A/C button.
4. Select the recirculation mode.
5. Select the coolest temperature.

Using these settings together for long periods of time may cause the air inside of your vehicle to become too dry. To prevent this from happening, after the air in your vehicle has cooled, turn the recirculation mode off.

The air conditioning system removes moisture from the air, so you may sometimes notice a small amount of water dripping underneath your vehicle while idling or after turning off the engine. This is normal.

## Defogging and Defrosting

Fog on the inside of windows is a result of high humidity or moisture condensing on the cool window glass. This can be minimized if the climate control system is used properly. There are two modes to clear fog or frost from your windshield. Use the defog mode to clear the windows of fog or moisture and warm the passengers. Use the defrost mode to remove fog or frost from the windshield more quickly.

For best results, clear all snow and ice from the windshield before defrosting.

Select one of these available modes from the right knob.

**(Defog):** This mode directs most of the air to the windshield and the floor outlets. A small amount of air is also directed to the outboard outlets for the side windows and to the instrument panel side outlets. When you select this mode, the system runs the air-conditioning compressor. To defog the windows faster, turn the temperature control knob clockwise to the warmest setting.

**(Defrost):** This mode directs the air to the windshield and the outboard outlets for the side windows. A small amount of air is also directed to the instrument panel side outlets. When you select this mode, the system runs the air-conditioning compressor. To defrost the windows faster, turn the temperature control knob clockwise to the warmest setting.

Do not drive the vehicle until all windows are clear.

## Rear Window and Outside Mirror Defogger

Your vehicle may have a rear window and outside mirror defogger. This feature will only work when the ignition is turned to ON.

The rear window defogger uses a warming grid to remove fog or frost from the rear window. Before using this feature, clear as much snow from the rear window as possible.

**(Rear Window Defogger):** Press this button to turn the rear window and outside mirror defogger on or off. An indicator light in the button will come on to let you know that the feature is activated.

If your vehicle does not have air conditioning, the rear window defogger will remain on until the button is pressed again or the engine is turned off.

If your vehicle has air conditioning, the rear window defogger will turn off about 10 minutes after the button is pressed. The defogger can also be turned off by pressing the button again or by turning the engine off.

***Notice:*** **Do not use anything sharp on the inside of the rear window. If you do, you could cut or damage the warming grid, and the repairs would not be covered by your warranty. Do not attach a temporary vehicle license, tape, a decal or anything similar to the defogger grid.**

## Outlet Adjustment

To open an outlet, press on its cover. Turn the cover to change the direction of the airflow.

### Operation Tips

- Clear away any ice, snow or leaves from the air inlets at the base of the windshield that may block the flow of air into your vehicle.
- Use of non-GM approved hood deflectors may adversely affect the performance of the system.
- Keep the path under the front seats clear of objects to help circulate the air inside of your vehicle more effectively.

## Passenger Compartment Air Filter

Your vehicle may have a passenger compartment air filter. It is located behind the glove box and can be accessed after removing the glove box from its housing.

The filter traps most of the pollen from air entering the module. Like your engine's air cleaner/filter, it may need to be changed periodically.

To change the passenger compartment air filter, use the following steps:

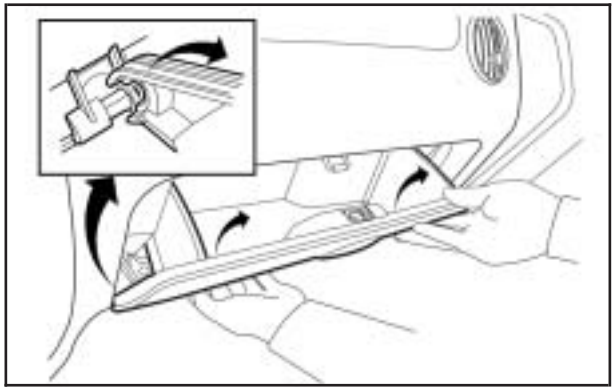

1. Open the glove box halfway down.
2. Grip the glove box by both the upper and lower sides and pull it out of its housing.

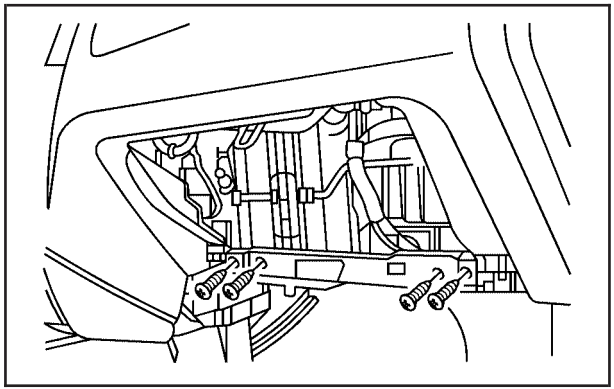

3. For hatchback models remove the four screws on the knee bolster and remove the knee bolster.

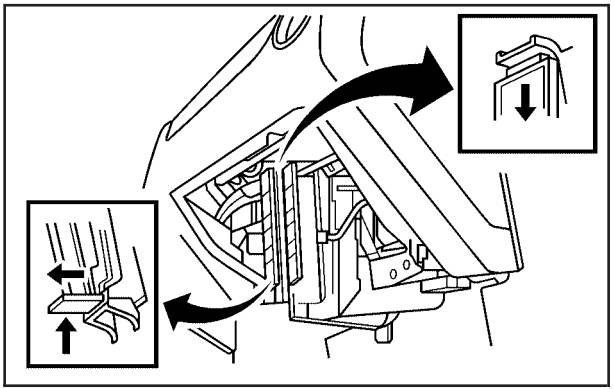

4. Then reverse the steps to install the new air filter and replace the glove box.

   View the air flow arrows on the filter before installing to ensure you install the filter correctly.

# Warning Lights, Gages, and Indicators

This part describes the warning lights and gages that may be on your vehicle. The pictures will help you locate them.

Warning lights and gages can signal that something is wrong before it becomes serious enough to cause an expensive repair or replacement. Paying attention to your warning lights and gages could also save you or others from injury.

Warning lights come on when there may be or is a problem with one of your vehicle's functions. As you will see in the details on the next few pages, some warning lights come on briefly when you start the engine just to let you know they are working. If you are familiar with this section, you should not be alarmed when this happens.

Gages can indicate when there may be or is a problem with one of your vehicle's functions. Often gages and warning lights work together to let you know when there is a problem with your vehicle.

When one of the warning lights comes on and stays on as you are driving, or when one of the gages shows there may be a problem, check the section that tells you what to do about it. Please follow this manual's advice. Waiting to do repairs can be costly and even dangerous. So please get to know your warning lights and gages. They are a big help.

## Instrument Panel Cluster

Your instrument panel cluster is designed to let you know at a glance how your vehicle is running. You will know how fast you are going, how much fuel you are using, and many other things you will need to drive safely and economically.

Your vehicle's instrument panel cluster includes indicator warning lights and gages that are explained on the following pages.

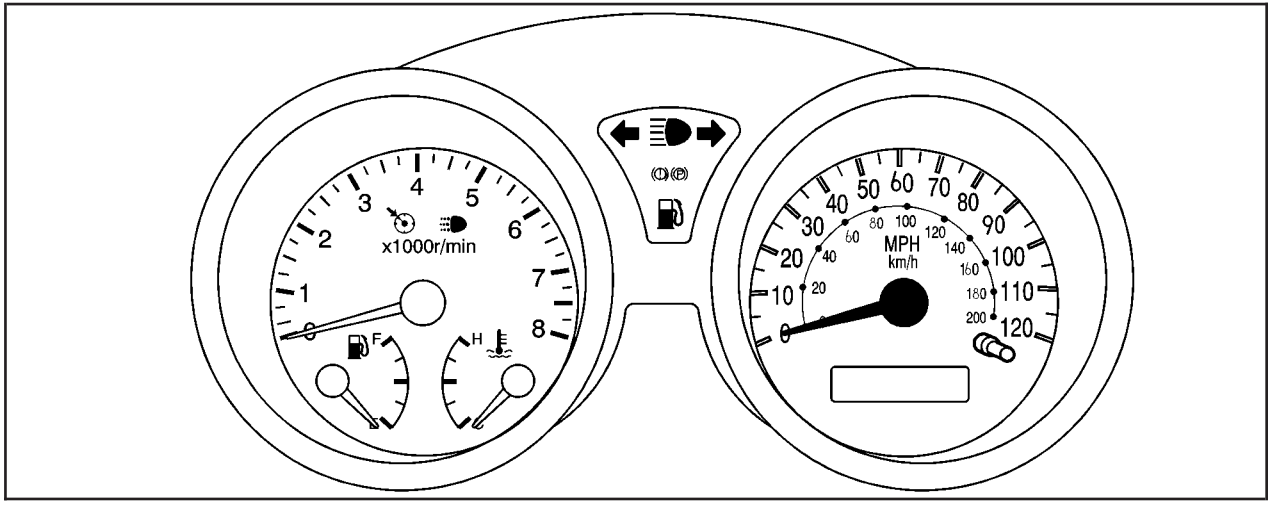


**United States Hatchback shown, Canada Hatchback similar**

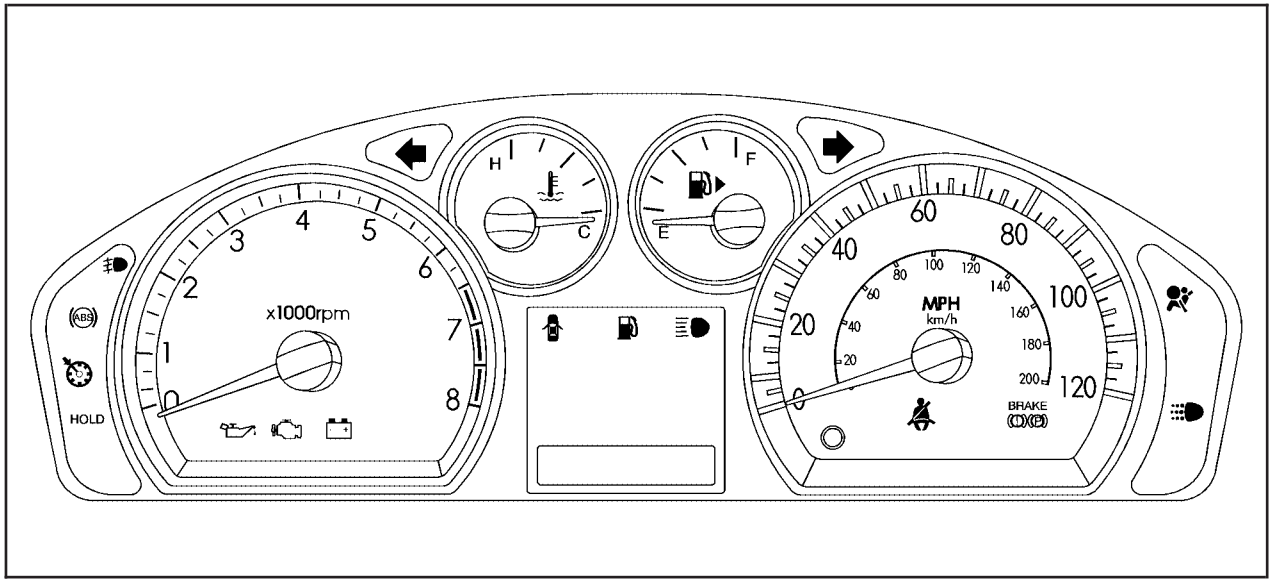


**United States Automatic Transaxle Sedan shown, Canada Manual Transaxle Sedan similar**

## Speedometer and Odometer

Your speedometer lets you see your speed in both miles per hour (mph) and kilometers per hour (km/h). Your odometer shows how far your vehicle has been driven in either miles, used in the United States, or kilometers, used in Canada.

## Trip Odometer

The trip odometer can record the number of miles, used in the United States, or kilometers, used in Canada, traveled for up to two trips.

You can cycle between the odometer and trip odometers A and B by pressing the reset button located in the lower right area of the speedometer. By pressing the reset button, you can tell how many miles or kilometers have been recorded on either Trip A or Trip B since you last set the trip odometer back to zero.

To reset each trip odometer to zero, press and hold the reset button. The reset button resets only the trip odometer that is being displayed. Each trip odometer must be reset individually.

## Tachometer

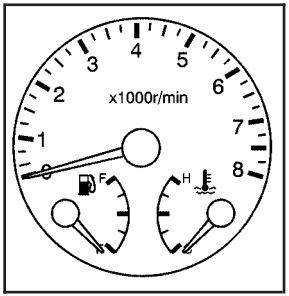


**Hatchback**

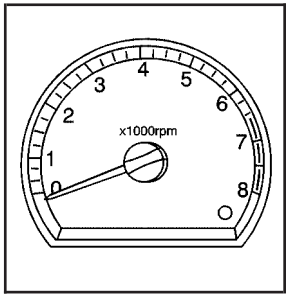


**Sedan**

The tachometer displays your engine speed in revolutions per minute (rpm).

***Notice:*** **If you operate the engine above 6,500 rpm, your vehicle could be damaged, and the damages would not be covered by your warranty. Do not operate the engine with the tachometer above 6,500 rpm.**

## Safety Belt Reminder Light

The safety belt light will come on and stay on until the driver's safety belt is buckled.

If the driver's belt is already buckled, the light will not come on.

## Safety Belt Reminder Tone

If your vehicle has this feature, a tone will sound for several seconds when the ignition is turned to ON to remind people to fasten their safety belts. The tone will not sound if the driver's safety belt is already buckled.

## Airbag Readiness Light

There is an airbag readiness light on the instrument panel cluster, which shows the airbag symbol. The system checks the airbag's electrical system for malfunctions. The light tells you if there is an electrical problem. The system check includes the airbag sensor, the airbag modules, the wiring and the crash sensing and diagnostic module. For more information on the airbag system, see *Airbag System on page 68*.

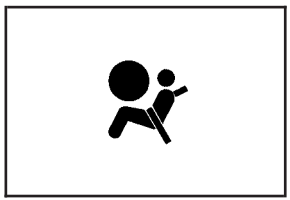

This light will come on when you start your vehicle, and it will flash for a few seconds. Then the light should go out. This means the system is ready.

If the airbag readiness light stays on after you start the vehicle or comes on when you are driving, your airbag system may not work properly. Have your vehicle serviced right away.

**⚠ CAUTION:**

**If the airbag readiness light stays on after you start your vehicle, it means the airbag system may not be working properly. The airbags in your vehicle may not inflate in a crash, or they could even inflate without a crash. To help avoid injury to yourself or others, have your vehicle serviced right away if the airbag readiness light stays on after you start your vehicle.**

The airbag readiness light should flash for a few seconds when you turn the ignition key to RUN. If the light does not come on then, have it fixed so it will be ready to warn you if there is a problem.

## Passenger Airbag Status Indicator

Your vehicle has a passenger airbag status indicator. If you have a sedan, the airbag off symbol will be visible near the clock, located in the center of the instrument panel during the system check. Or, if you have a hatchback, the airbag off symbol will be located in the secondary information center. See *Secondary Information Center (SIC) (Hatchback Only) on page 175* for location information.

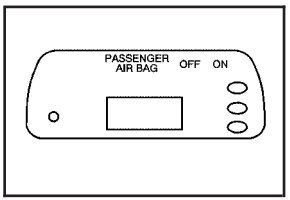


**United States — Sedan**

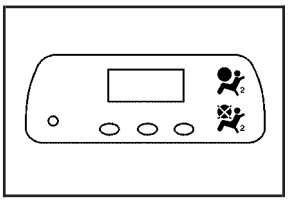

**Canada — Sedan**

When the ignition key is turned to ON or START, the passenger airbag status indicator will light for several seconds as a system check. Then, after several more seconds, if the off symbol is lit on the passenger airbag status indicator, it means that the passenger sensing system has turned off the right front passenger's frontal airbag and side impact airbag (if equipped).

See *Passenger Sensing System on page 77* for more on this, including important safety information.

If the off symbol is not lit on the passenger airbag status indicator, it means that the right front passenger's frontal airbag and side impact airbag (if equipped) are enabled (may inflate).

**⚠ CAUTION:**

**If the off symbol in the passenger airbag status indicator does not come on when you have a rear-facing child restraint installed in the right front passenger's seat, it means that the passenger sensing system has not turned off the passenger's frontal airbag and side airbag (if equipped). A child in a rear-facing child restraint can be seriously injured or killed if the right front passenger's airbag or airbags inflate. This is because the back of the rear-facing child restraint would be very close to the inflating airbag or airbags.**

**CAUTION: (Continued)**

**CAUTION: (Continued)**

**Do not use a rear-facing child restraint in the right front passenger's seat unless the airbag or airbags have been turned off.**

**⚠ CAUTION:**

**If the airbag readiness light in the instrument panel cluster ever comes on and stays on, it means that something may be wrong with the airbag system. If this ever happens, have the vehicle serviced promptly, because an adult-size person sitting in the right front passenger's seat may not have the protection of the frontal airbag and side airbag (if equipped). See *Airbag Readiness Light on page 176* for more on this, including important safety information.**

## Charging System Light

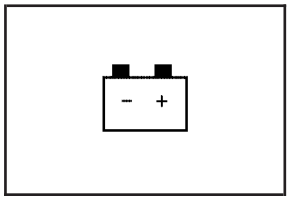


The charging system light will come on briefly when you turn on the ignition, and the engine is not running, as a check to show you it is working.

Then it should go out when the engine is started.

If it stays on, or comes on while you are driving, you may have a problem with the electrical charging system. Have it checked by your dealer. Driving while this light is on could drain your battery.

If you must drive a short distance with the light on, be certain to turn off all your accessories, such as the radio and air conditioner.

## Brake System Warning Light

Your vehicle's hydraulic brake system is divided into two parts. If one part is not working, the other part can still work and stop you. For good braking, though, you need both parts working well.

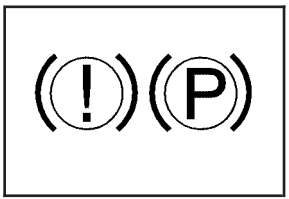


**Hatchback and Canada Sedan**

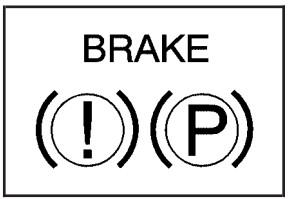


**U.S. Sedan Only**

If the warning light comes on, there is a brake problem. Have your brake system inspected right away.

When the ignition is on, the brake system warning light will also come on when you set your parking brake. The light will stay on if your parking brake does not fully release. If it stays on after your parking brake is fully released, it means you have a brake problem.

If the light comes on while you are driving, pull off the road and stop carefully. You may notice that the pedal is harder to push or the pedal may go closer to the floor. It may take longer to stop. If the light is still on, have the vehicle towed for service. See *Towing Your Vehicle on page 257*.

**⚠ CAUTION:**

**Your brake system may not be working properly if the brake system warning light is on. Driving with the brake system warning light on can lead to an accident. If the light is still on after you have pulled off the road and stopped carefully, have the vehicle towed for service.**

## Anti-Lock Brake System Warning Light

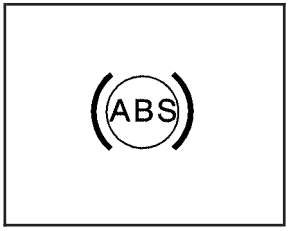


If your vehicle has an Anti-Lock Brake System (ABS), this light will come on when the ignition is turned to ON and may stay on for several seconds. That is normal.

If the light stays on, turn the ignition to LOCK. If the light comes on, stop as soon as possible and turn the ignition off. Then start the engine again to reset the system. If the light still stays on, or comes on again while you are driving, your vehicle needs service. See your dealer.

If the regular brake system warning light is not on, you still have brakes, but you do not have anti-lock brakes. If the regular brake system warning light is also on, you do not have anti-lock brakes and there is a problem with your regular brakes. See *Brake System Warning Light on page 164*.

The ABS warning light will come on briefly when you turn the ignition to ON. This is normal. If the light does not come on then, have it fixed so it will be ready to warn you if there is a problem.

## Hold Mode Light

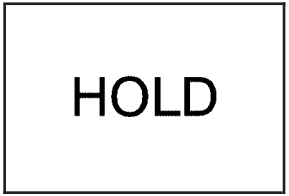


If your vehicle has this feature, this light will come on when the hold mode is active.

If the HOLD mode light flashes, have your vehicle checked. See “Hold Mode” under *Automatic Transaxle Operation on page 111* for additional information on this feature.

## Engine Coolant Temperature Gage

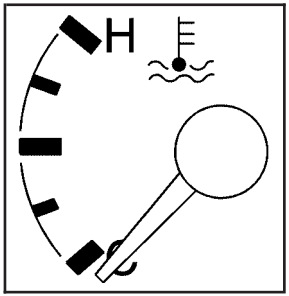


**United States Hatchback**

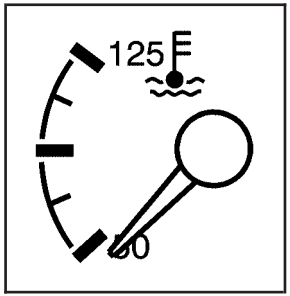


**Canada Hatchback**

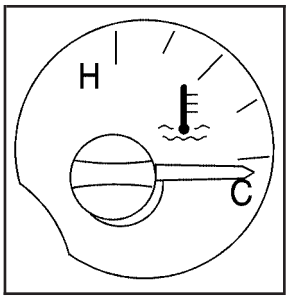


**United States Sedan**

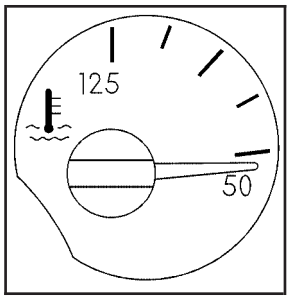


**Canada Sedan**

Your vehicle has an engine coolant temperature gage. With the ignition turned to ON, this gage shows the engine coolant temperature.

If the gage pointer moves into the red area, your engine is too hot. It means that your engine coolant has overheated.

If you have been operating your vehicle under normal driving conditions, you should pull off the road, stop your vehicle and turn off the engine as soon as possible.

See *Engine Overheating on page 290*.

# Malfunction Indicator Lamp

## Check Engine Light

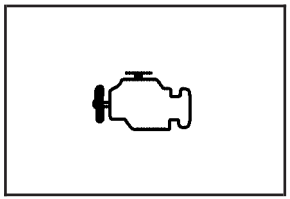

Your vehicle has a computer which monitors operation of the fuel, ignition, and emission control systems.

This system is called OBD II (On-Board Diagnostics-Second Generation) and is intended to assure that emissions are at acceptable levels for the life of the vehicle, helping to produce a cleaner environment. The Check Engine light comes on to indicate that there is a problem and service is required. Malfunctions often will be indicated by the system before any problem is apparent. This may prevent more serious damage to your vehicle. This system is also designed to assist your service technician in correctly diagnosing any malfunction.

***Notice:*** **If you keep driving your vehicle with this light on, after awhile, your emission controls may not work as well, your fuel economy may not be as good, and your engine may not run as smoothly. This could lead to costly repairs that may not be covered by your warranty.**

***Notice:*** **Modifications made to the engine, transaxle, exhaust, intake, or fuel system of your vehicle or replacement tires that do not match your vehicle's original tires can affect your vehicle's emission controls and may cause this light to come on. Modifications to these systems could lead to costly repairs not covered by your warranty. This may also result in a failure to pass a required Emission Inspection/Maintenance test. See *Accessories and Modifications on page 264*.**

When the ignition is on, this light should come on and should go out after a few seconds as a check to show you it is working. If the light does not come on, have it repaired.

This light will also come on during a malfunction in one of two ways:

- **Light Flashing** — A misfire condition has been detected. A misfire increases vehicle emissions and may damage the emission control system on your vehicle. Diagnosis and service may be required.
- **Light On Steady** — An emission control system malfunction has been detected on your vehicle. Diagnosis and service may be required.

## If the Light Is Flashing

The following may prevent more serious damage to your vehicle:

- Reducing vehicle speed
- Avoiding hard accelerations
- Avoiding steep uphill grades

If the light stops flashing and remains on steady, see “If the Light Is On Steady” following.

If the light continues to flash, when it is safe to do so, stop the vehicle. Find a safe place to park your vehicle. Turn the key off, wait at least 10 seconds and restart the engine. If the light remains on steady, see “If the Light Is On Steady” following. If the light is still flashing, follow the previous steps, and see your dealer for service as soon as possible.

## If the Light Is On Steady

You also may be able to correct the emission system malfunction by considering the following:

Did you recently put fuel into your vehicle?

If so, reinstall the fuel cap, making sure to fully install the cap. See *Filling the Tank on page 269*. The diagnostic system can determine if the fuel cap has been left off or improperly installed. A loose or missing fuel cap will allow fuel to evaporate into the atmosphere. A few driving trips with the cap properly installed should turn the light off.

Did you just drive through a deep puddle of water?

If so, your electrical system may be wet. The condition will usually be corrected when the electrical system dries out. A few driving trips should turn the light off.

Have you recently changed brands of fuel?

If so, be sure to fuel your vehicle with quality fuel. See *Gasoline Octane on page 266*. Poor fuel quality will cause your engine not to run as efficiently as designed. You may notice this as stalling after start-up, stalling when you put the vehicle into gear, misfiring, hesitation on acceleration, or stumbling on acceleration. (These conditions may go away once the engine is warmed up.) This will be detected by the system and cause the light to turn on.

If you experience one or more of these conditions, change the fuel brand you use. It will require at least one full tank of the proper fuel to turn the light off.

If none of the above steps have made the light turn off, your dealer can check the vehicle. Your dealer has the proper test equipment and diagnostic tools to fix any mechanical or electrical problems that may have developed.

## Emissions Inspection and Maintenance Programs

Some state/provincial and local governments have or may begin programs to inspect the emission control equipment on your vehicle. Failure to pass this inspection could prevent you from getting a vehicle registration.

Here are some things you need to know to help your vehicle pass an inspection:

Your vehicle will not pass this inspection if the Check Engine light is on or not working properly.

Your vehicle will not pass this inspection if the OBD (on-board diagnostic) system determines that critical emission control systems have not been completely diagnosed by the system. The vehicle would be considered not ready for inspection. This can happen if you have recently replaced your battery or if your battery has run down. The diagnostic system is designed to evaluate critical emission control systems during normal driving. This may take several days of routine driving. If you have done this and your vehicle still does not pass the inspection for lack of OBD system readiness, your GM dealer can prepare the vehicle for inspection.

## Oil Pressure Light

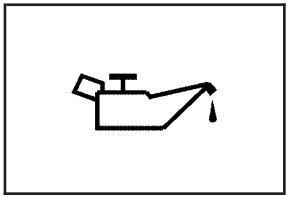

If your vehicle has low engine oil pressure, this light will stay on after you start your engine, or come on when you are driving.

This indicates that your engine is not receiving enough oil. The engine could be low on oil, or could have some other oil problem. Have it fixed immediately by your dealer.

The oil light could also come on in three other situations:

- When the ignition is on but the engine is not running, the light will come on as a test to show you it is working. The light will go out when you turn the ignition on. If it does not come on with the ignition on, you may have a problem with the fuse or bulb. Have it fixed right away.
- If you make a hard stop, the light may come on for a moment. This is normal.

**⚠ CAUTION:**

**Do not keep driving if the oil pressure is low. If you do, your engine can become so hot that it catches fire. You or others could be burned. Check your oil as soon as possible and have your vehicle serviced.**

***Notice:*** **Lack of proper engine oil maintenance may damage the engine. The repairs would not be covered by your warranty. Always follow the maintenance schedule in this manual for changing engine oil.**

## Fog Lamp Light

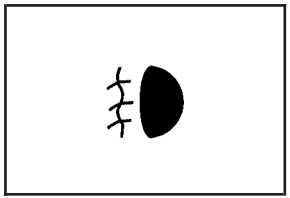

If your vehicle has this feature, the fog lamps light will come on when the fog lamps are in use.

The light will go out when the fog lamps are turned off. See *Fog Lamps on page 147* for more information.

## Cruise Control Light

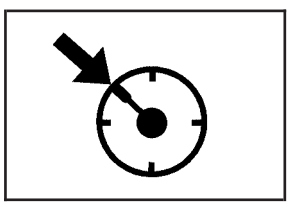

If your vehicle has cruise control, this light comes on whenever you set your cruise control.

The light will go out when the cruise control is turned off. See *Cruise Control on page 141* for more information.

## Highbeam On Light

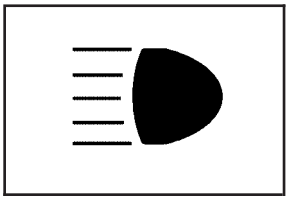

This light comes on whenever the high-beam headlamps are on.

See *Headlamp High/Low-Beam Changer on page 138* for additional information.

## Daytime Running Lamps (DRL) Indicator Light

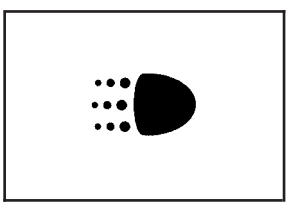

This light will come on when the Daytime Running Lamps (DRL) are on.

A flashing DRL light indicates a possible burned out headlamp, or that the vehicle may need service to repair a defective DRL relay. See your dealer.

See *Daytime Running Lamps (DRL) on page 146* for more information.

## Door Ajar Light

The door ajar light will come on whenever a door is opened, regardless of the ignition position.

If the key is in the ignition while the driver's door is open, you will also hear a warning chime.

## Fuel Gage

**United States Hatchback**

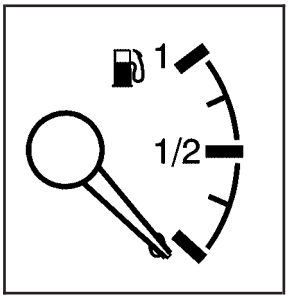


**Canada Hatchback**

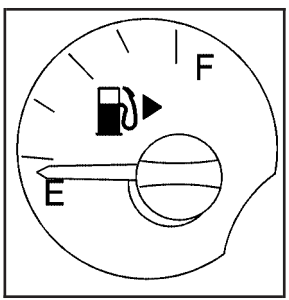


**United States Sedan**

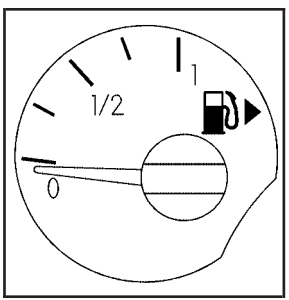


**Canada Sedan**

Your fuel gage tells you about how much fuel you have left when the ignition is turned to ON.

When the tank nears empty, the low fuel warning light will come on. You still have a little fuel left, but you should get more soon. See *Low Fuel Warning Light on page 174* for more information.

Here are four things that some owners ask about. None of these show a problem with your fuel gage:

- At the service station, the gas pump shuts off before the gage reads full.
- It takes a little more or less fuel to fill up than the gage indicated. For example, the gage may have indicated the tank was half full, but it actually took a little more or less than half the tank's capacity to fill the tank.
- The indicator moves a little when you turn a corner or speed up.
- The gage goes back to empty when you turn off the ignition.

## Low Fuel Warning Light

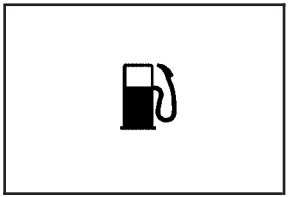

This light comes on when the vehicle is low on fuel.

The low fuel warning light comes on when there is approximately 1.7 gallons (6.0 liters) of fuel remaining in the tank.

To turn the light off, add fuel to the fuel tank. See *Filling the Tank on page 269*.

# Secondary Information Center (SIC)

## Secondary Information Center (SIC) (Hatchback Only)

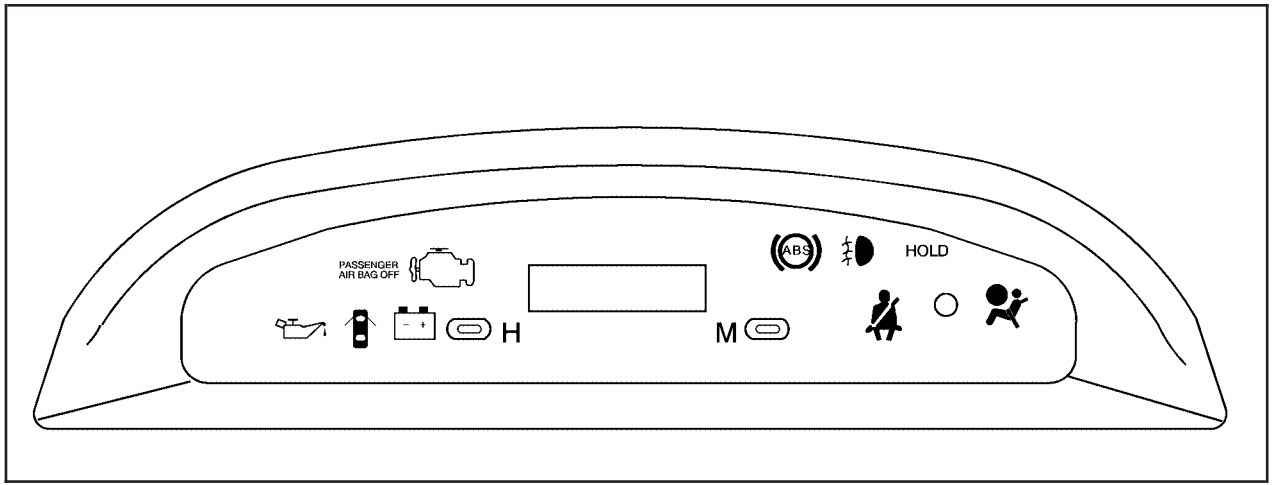


**United States shown, Canada similar**

The secondary information center (SIC) displays some of the warning lights and indicators. The SIC is located in the center of the instrument panel, above the center air outlets. The digital clock is also located in the center of the SIC. See *Clock (Hatchback Only) on page 176* and *Instrument Panel Overview on page 132* for more information.

## Clock (Hatchback Only)

Your vehicle has a digital clock. The clock is located in the secondary instrument cluster on the center of the instrument panel, above the center air outlets. When the ignition is turned to ACC or ON, the time is displayed in the digital clock. There are two adjusting buttons for the digital clock:

**H (Hour):** To go forward one hour, press the H button once. To go forward more than one hour, press and hold the button until the correct hour is reached.

**M (Minute):** To go forward one minute, press the M button once. To go forward more than one minute, press and hold the button until the correct minute is reached.

After disconnecting the battery or replacing the fuse, reset the clock.

## Safety Belt Reminder Light

The safety belt light will come on and stay on until the driver's safety belt is buckled.

This light will come on briefly when you turn on the ignition as a check to show you it is working.

## Airbag Readiness Light

There is an airbag readiness light on the secondary information center (SIC), which shows the airbag symbol. The system checks the airbag's electrical system for malfunctions. The light tells you if there is an electrical problem. The system check includes the airbag sensor, the airbag modules, the wiring and the crash sensing and diagnostic module. For more information on the airbag system, see *Airbag System on page 68*.

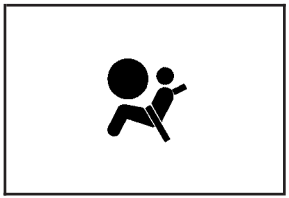

This light will come on when you start your vehicle, and it will flash for a few seconds. Then the light should go out. This means the system is ready.

If the airbag readiness light stays on after you start the vehicle or comes on or flashes when you are driving, your airbag system may not work properly. Have your vehicle serviced right away by your dealer.

**⚠ CAUTION:**

**If the airbag readiness light stays on after you start your vehicle, it means the airbag system may not be working properly. The airbags in your vehicle may not inflate in a crash, or they could even inflate without a crash. To help avoid injury to yourself or others, have your vehicle serviced right away if the airbag readiness light stays on after you start your vehicle.**

The airbag readiness light should flash for a few seconds when you turn the ignition to ON. If the light does not come on then, have it fixed so it will be ready to warn you if there is a problem.

## Passenger Airbag Status Indicator (Hatchback)

Your vehicle has passenger airbag status indicator.

**United States — Hatchback**

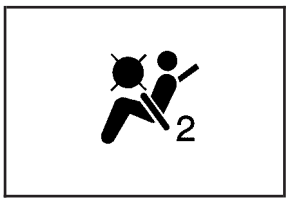


**Canada — Hatchback**

If you have a hatchback, the airbag off symbol is visible in the Secondary Information Center (SIC) during the system check.

When the ignition key is turned to ON or START, the passenger airbag status indicator will light for several seconds as a system check. Then, after several more seconds, if the off symbol is lit on the passenger airbag status indicator, it means that the passenger sensing system has turned off the right front passenger's frontal airbag and side impact airbag (if equipped). See *Passenger Sensing System on page 77* for more on this, including important safety information.

If the off symbol is not lit on the passenger airbag status indicator, it means that the right front passenger's frontal airbag and side impact airbag (if equipped) are enabled (may inflate).

**⚠ CAUTION:**

**If the off symbol in the passenger airbag status indicator does not come on when you have a rear-facing child restraint installed in the right front passenger's seat, it means that the passenger sensing system has not turned off the passenger's frontal airbag and side airbag (if equipped). A child in a rear-facing child restraint can be seriously injured or killed if the right front passenger's airbag or airbags inflate. This is because the back of the rear-facing child restraint would be very close to the inflating airbag or airbags. Do not use a rear-facing child restraint in the right front passenger's seat unless the airbag or airbags have been turned off.**

**⚠ CAUTION:**

**If the airbag readiness light in the instrument panel cluster ever comes on and stays on, it means that something may be wrong with the airbag system. If this ever happens, have the vehicle serviced promptly, because an adult-size person sitting in the right front passenger's seat may not have the protection of the frontal airbag and side airbag (if equipped). See *Airbag Readiness Light on page 176* for more on this, including important safety information.**

## Charging System Light

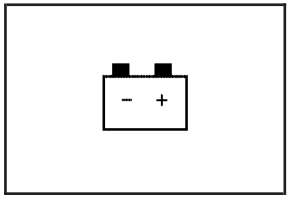


The charging system light will come on briefly when you turn on the ignition, and the engine is not running, as a check to show you it is working.

Then it should go out when the engine is started.

If it stays on, or comes on while you are driving, you may have a problem with the electrical charging system. Have it checked by your dealer. Driving while this light is on could drain your battery.

If you must drive a short distance with the light on, be certain to turn off all your accessories, such as the radio and air conditioner.

## Anti-Lock Brake System Warning Light

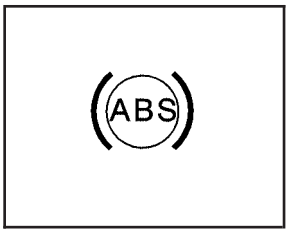


If your vehicle has an Anti-Lock Brake System (ABS), this light will come on when the ignition is turned to ON and may stay on for several seconds. That is normal.

If the light stays on, turn the ignition to LOCK. If the light comes on, stop as soon as possible and turn the ignition off. Then start the engine again to reset the system. If the light still stays on, or comes on again while you are driving, your vehicle needs service. See your dealer. If the regular brake system warning light is not on, you still have brakes, but you do not have anti-lock brakes. If the regular brake system warning light is also on, you do not have anti-lock brakes and there is a problem with your regular brakes. See *Brake System Warning Light on page 164*.

The ABS warning light will come on briefly when you turn the ignition to ON. This is normal. If the light does not come on then, have it fixed so it will be ready to warn you if there is a problem.

## Hold Mode Light

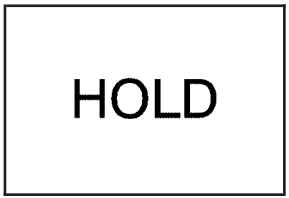


If your vehicle has this feature, this light will come on when the hold mode is active.

If the HOLD mode light flashes, have your vehicle checked. See “Hold Mode” under *Automatic Transaxle Operation on page 111* for additional information on this feature.

# Malfunction Indicator Lamp

## Check Engine Light

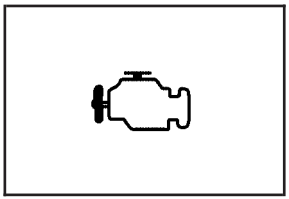

Your vehicle has a computer which monitors operation of the fuel, ignition, and emission control systems.

This system is called OBD II (On-Board Diagnostics-Second Generation) and is intended to assure that emissions are at acceptable levels for the life of the vehicle, helping to produce a cleaner environment. The Check Engine light comes on to indicate that there is a problem and service is required. Malfunctions often will be indicated by the system before any problem is apparent.

This may prevent more serious damage to your vehicle. This system is also designed to assist your service technician in correctly diagnosing any malfunction.

***Notice:*** **If you keep driving your vehicle with this light on, after awhile, your emission controls may not work as well, your fuel economy may not be as good, and your engine may not run as smoothly. This could lead to costly repairs that may not be covered by your warranty.**

***Notice:*** **Modifications made to the engine, transaxle, exhaust, intake, or fuel system of your vehicle or replacement tires that do not match your vehicle's original tires can affect your vehicle's emission controls and may cause this light to come on. Modifications to these systems could lead to costly repairs not covered by your warranty. This may also result in a failure to pass a required Emission Inspection/Maintenance test. See *Accessories and Modifications on page 264*.**

When the ignition is on, this light should come on and should go out after a few seconds as a check to show you it is working. If the light does not come on, have it repaired.

This light will also come on during a malfunction in one of two ways:

- **Light Flashing** — A misfire condition has been detected. A misfire increases vehicle emissions and may damage the emission control system on your vehicle. Diagnosis and service may be required.
- **Light On Steady** — An emission control system malfunction has been detected on your vehicle. Diagnosis and service may be required.

## If the Light Is Flashing

The following may prevent more serious damage to your vehicle:

- Reducing vehicle speed
- Avoiding hard accelerations
- Avoiding steep uphill grades

If the light stops flashing and remains on steady, see “If the Light Is On Steady” following.

If the light continues to flash, when it is safe to do so, stop the vehicle. Find a safe place to park your vehicle. Turn the key off, wait at least 10 seconds and restart the engine. If the light remains on steady, see “If the Light Is On Steady” following. If the light is still flashing, follow the previous steps, and see your dealer for service as soon as possible.

## If the Light Is On Steady

You also may be able to correct the emission system malfunction by considering the following:

Did you recently put fuel into your vehicle?

If so, reinstall the fuel cap, making sure to fully install the cap. See *Filling the Tank on page 269*. The diagnostic system can determine if the fuel cap has been left off or improperly installed. A loose or missing fuel cap will allow fuel to evaporate into the atmosphere. A few driving trips with the cap properly installed should turn the light off.

Did you just drive through a deep puddle of water?

If so, your electrical system may be wet. The condition will usually be corrected when the electrical system dries out. A few driving trips should turn the light off.

Have you recently changed brands of fuel?

If so, be sure to fuel your vehicle with quality fuel. See *Gasoline Octane on page 266*. Poor fuel quality will cause your engine not to run as efficiently as designed. You may notice this as stalling after start-up, stalling when you put the vehicle into gear, misfiring, hesitation on acceleration, or stumbling on acceleration. (These conditions may go away once the engine is warmed up.) This will be detected by the system and cause the light to turn on.

If you experience one or more of these conditions, change the fuel brand you use. It will require at least one full tank of the proper fuel to turn the light off.

If none of the above steps have made the light turn off, your dealer can check the vehicle. Your dealer has the proper test equipment and diagnostic tools to fix any mechanical or electrical problems that may have developed.

## Emissions Inspection and Maintenance Programs

Some state/provincial and local governments have or may begin programs to inspect the emission control equipment on your vehicle. Failure to pass this inspection could prevent you from getting a vehicle registration.

Here are some things you need to know to help your vehicle pass an inspection:

Your vehicle will not pass this inspection if the Check Engine light is on or not working properly.

Your vehicle will not pass this inspection if the OBD (on-board diagnostic) system determines that critical emission control systems have not been completely diagnosed by the system. The vehicle would be considered not ready for inspection. This can happen if you have recently replaced your battery or if your battery has run down. The diagnostic system is designed to evaluate critical emission control systems during normal driving. This may take several days of routine driving. If you have done this and your vehicle still does not pass the inspection for lack of OBD system readiness, your GM dealer can prepare the vehicle for inspection.

## Oil Pressure Light

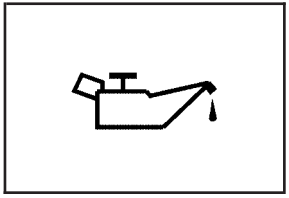

If your vehicle has low engine oil pressure, this light will stay on after you start your engine, or come on when you are driving.

This indicates that your engine is not receiving enough oil. The engine could be low on oil, or could have some other oil problem. Have it fixed immediately by your dealer.

The oil light could also come on in three other situations:

- When the ignition is on but the engine is not running, the light will come on as a test to show you it is working. The light will go out when you turn the ignition on. If it does not come on with the ignition on, you may have a problem with the fuse or bulb. Have it fixed right away.
- If you make a hard stop, the light may come on for a moment. This is normal.

**⚠ CAUTION:**

**Do not keep driving if the oil pressure is low. If you do, your engine can become so hot that it catches fire. You or others could be burned. Check your oil as soon as possible and have your vehicle serviced.**

***Notice:*** **Lack of proper engine oil maintenance may damage the engine. The repairs would not be covered by your warranty. Always follow the maintenance schedule in this manual for changing engine oil.**

## Fog Lamp Light

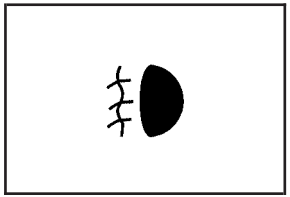

If your vehicle has this feature, the fog lamps light will come on when the fog lamps are in use.

The light will go out when the fog lamps are turned off. See *Fog Lamps on page 147* for more information.

## Door Ajar Light

The door ajar light will come on whenever a door is opened, regardless of the ignition position.

If the key is in the ignition while the driver's door is open, you will also hear a warning chime.

# Audio System(s)

Determine which radio your vehicle has and then read the pages following to familiarize yourself with its features.

Driving without distraction is a necessity for a safer driving experience. See *Defensive Driving on page 220*. By taking a few moments to read this manual and get familiar with your vehicle's audio system, you can use it with less effort, as well as take advantage of its features. While your vehicle is parked, set up your audio system by presetting your favorite radio stations, setting the tone and adjusting the speakers. Then, when driving conditions permit, you can tune to your favorite stations using the presets and steering wheel controls if the vehicle has them.

## ⚠ CAUTION:

**This system provides you with a far greater access to audio stations and song listings. Giving extended attention to entertainment tasks while driving can cause a crash and you or others can be injured or killed. Always keep your eyes on the road and your mind on the drive — avoid engaging in extended searching while driving.**

Keeping your mind on the drive is important for safe driving. Here are some ways in which you can help avoid distraction while driving.

While your vehicle is parked:

- Familiarize yourself with all of its controls.
- Familiarize yourself with its operation.
- Set up your audio system by presetting your favorite radio stations, setting the tone, and adjusting the speakers. Then, when driving conditions permit, you can tune to your favorite radio stations using the presets and steering wheel controls if the vehicle has them.

***Notice:*** **Before adding any sound equipment to your vehicle, such as an audio system, CD player, CB radio, mobile telephone, or two-way radio, make sure that it can be added by checking with your dealer. Also, check federal rules covering mobile radio and telephone units. If sound equipment can be added, it is very important to do it properly. Added sound equipment may interfere with the operation of your vehicle's engine, radio, or other systems, and even damage them. Your vehicle's systems may interfere with the operation of sound equipment that has been added.**

# AM-FM Radio (Single Display, Base Level)

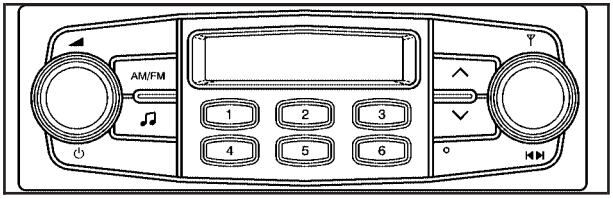


## Playing the Radio

⏻ **(Power):** Press this knob to turn the system on or off.

**(Volume):** Turn this knob to increase or to decrease the volume. VOL will appear on the display.

## Finding a Station

**AM/FM:** Press this button to switch between FM1, FM2, or AM. The display will show the selection.

**(Tune):** Turn this knob to select radio stations.

**(Scan):** Press this knob until SCAN flashes on the display, then press either the up or the down arrow buttons to determine the direction for the radio to scan the stations. The radio will go to a station, play for a few seconds, then go on to the next station. Press either arrow button again to stop scanning.

The radio will only scan stations with a strong signal that are in the selected band.

## Setting Preset Stations

Up to 18 stations (six FM1, six FM2, and six AM) can be programmed on the six numbered pushbuttons, by performing the following steps:

1. Turn the radio on.
2. Press AM/FM to select FM1, FM2, or AM.
3. Tune in the desired station.
4. Press and hold one of the six numbered pushbuttons for longer than two seconds. Ch will appear on the display when the station has been set. Whenever that numbered pushbutton is pressed, the station that was set will return.
5. Repeat the Steps 1 through 4 for each pushbutton.

## Setting the Tone (Bass/Treble)

♫ **(Bass/Treble):** Press this button until BAS appears on the display. Then turn the volume knob to increase or to decrease the bass. The display will show the bass level.

Press this button until TRE appears on the display. Then turn the volume knob to increase or to decrease the treble. The display will show the treble level. If a station is weak or noisy, decrease the treble.

## Adjusting the Speakers (Balance/Fade)

♫ **(Balance/Fade):** To adjust the balance between the right and the left speakers, press this button until BAL appears on the display. Then turn the volume knob to increase or to decrease the balance between the right and the left speakers. The display will show the balance level.

To adjust the fade between the front and the rear speakers, press this button until FAD appears on the display. Then turn the volume knob to increase or to decrease the fade between the front and the rear speakers. The display will show the fade level.

# AM-FM Radio (Double Display, Base Level)

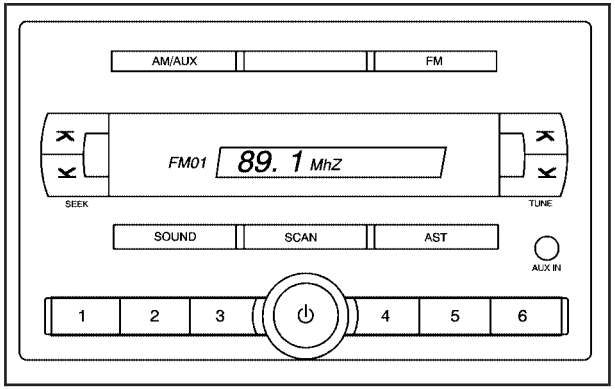


## Playing the Radio

⏻ **(Power/Volume):** Press this knob to turn the system on or off.

Turn this knob clockwise or counterclockwise to increase or decrease the volume.

Press and hold this knob for more than two seconds to silence the system. Press and release this knob again to turn the sound back on.

The previous volume setting is maintained whenever the radio is turned on. The volume can be adjusted by using the volume knob.

## Finding a Station

**AM/AUX:** Press this button to play an AM station while a portable audio device is playing. Press this button again and the system will begin playing audio from the connected portable audio player. If a portable audio player is not connected, “no input device found” will be displayed.

**FM:** Press this button to switch between FM1 or FM2. The display will show the selection.

⌅ ⌄ **SEEK:** Press the up or down SEEK arrow to go to the next or to the previous station and stay there.

The radio will only seek stations with a strong signal that are in the selected band.

**TUNE:** Press the up or down TUNE arrow to go to the next or to the previous radio station.

**SCAN:** Push and release this button to scan radio stations. The radio will go to a station, play for a few seconds, then go on to the next station. Push this button again to stop scanning.

The radio will only scan stations with a strong signal that are in the selected band.

## Setting Preset Stations

Up to 36 stations (six FM1, six FM2, six FM-A and six AM1, six AM2, six AM-A), can be programmed on the six numbered pushbuttons, by performing the following steps:

1. Turn the radio on.
2. Press AM/AUX to select AM1, AM2, or AM-A. Press FM to select FM1, FM2 or FM-A.
3. Tune in the desired station.
4. Press and hold one of the six numbered pushbuttons for longer than two seconds. The channel number (CH#1 through CH#6) will flash on the display when the station has been set. Whenever that numbered preset button is pressed, the station that was set will return.
5. Repeat the first four steps for each preset button.

**AST (Automatic Store):** Six FM1 preset stations with the strongest reception in the region can be automatically stored. Press the AST button for longer than one second. The display will show AUTO SCANNING and then SCANNING will flash on display. Once the stations are stored, the radio will switch to FM1 and the first preset station will begin to play. FM-A will appear on the display when listening to the automatic stored stations. Press the AM or FM button to cancel automatic store.

## Order of Sound Function

The order for displayed sound function is BASS, MID, TRE, FAD, BAL, EQ OFF, and VOL.

## Setting the Tone (Bass/Midrange/Treble)

**SOUND (Bass/Midrange/Treble):** Press this button until BAS appears on the display. Turn the power/volume knob to increase or to decrease the bass. The display will show the bass level. When finished making the selection, press this button to select the bass level.

Press this button until MID appears on the display. Turn the power/volume knob to increase or to decrease the midrange. The display will show the midrange level. When finished making the selection, press this button to select the midrange level.

Press this button until TRE appears on the display. Turn the power/volume knob to increase or to decrease the treble. The display will show the treble level. When finished making the selection, press this button to select the treble level. If a station is weak or there is static, decrease the treble.

## Adjusting the Speakers (Balance/Fade)

**SOUND (Balance/Fade):** To adjust the balance between the right and the left speakers, press this button until BAL appears on the display. Turn the power/volume knob to increase or to decrease. The display will show the balance level. When finished making the selection, press this button to select the balance level.

To adjust the fade between the front and the rear speakers, press this button until FAD appears on the display. Turn the power/volume knob to increase or to decrease the fade between the front and the rear speakers. The display will show the fade level. When finished making the selection, press this button to select the fade level.

## Setting the EQ (Equalization)

**SOUND (Equalization):** Press this button until EQ OFF appears on the display to select customized equalization settings designed for classic, dance, rock, jazz, pop, voice, and techno. Turn the power/volume knob until the desired equalization setting appears on the display. When finished making the selection, press the SOUND button to select the equalization setting.

To cancel an equalization setting, press the SOUND button until EQ OFF appears on the display, turn the power/volume knob until OFF appears on the display, then press the SOUND button again to select the equalization setting.

## Order of Sound Function

The order for displayed sound function is EQ OFF, CLASSIC, DANCE, ROCK, JAZZ, POP, VOICE, TECHNO, and EQ OFF.

## Using the Auxiliary Input Jack

**AUX IN (Auxiliary Input):** Your radio system has an auxiliary input jack located on the lower right side of the faceplate. This is not an audio output; do not plug the headphone set into the front auxiliary input jack. You can however, connect an external audio device such as an iPod, laptop computer, MP3 player, CD changer, or XM™ receiver, etc. to the auxiliary input jack for use as another source for audio listening.

The auxiliary input jack will also accept cell phone connectors. Plug the cell phone connector into the auxiliary input jack to hear the other side of a cell phone's conversation through the vehicle sound system.

Drivers are encouraged to set up any auxiliary device while the vehicle is in park (P). See *Defensive Driving on page 220* for more information on driver distraction.

To use a portable audio player, connect a 3.5 mm (1/8 inch) cable to the radio's front auxiliary input jack. When a device is connected, turn the portable audio player on. Press and hold the radio AM/AUX button for more than two seconds or until audio from the device begins to play over the car speakers.

⏻ **(Power/Volume):** Turn this knob clockwise or counterclockwise to increase or decrease the volume of the portable player. You may need to do additional volume adjustments from the portable device if the volume is not loud or soft enough.

**AM/AUX:** Press this button to listen to the radio while a portable audio device is playing. The portable audio device will continue playing, so you may want to stop it or turn it off.

## Radio with CD (MP3/WMA)

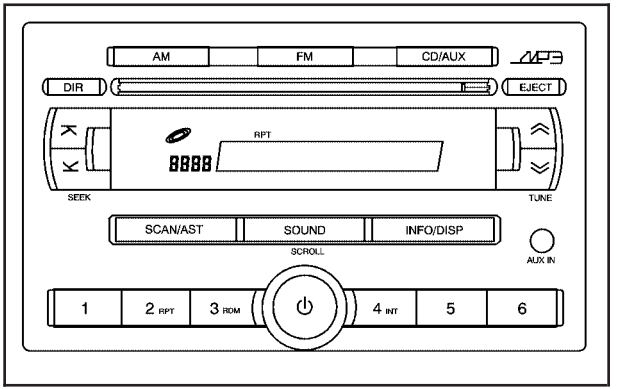


## Playing the Radio

⏻ **(Power/Volume):** Press and release this knob to turn the system on or off.

Turn the power/volume knob clockwise or counterclockwise to increase or decrease the volume.

Press this button for longer than two seconds to mute the system.

## Finding a Station

**AM:** Press this button to switch to an AM station. The display shows the selection.

**FM:** Press this button to switch to an FM station. The display shows the selection.

⌃ ⌄ **TUNE:** Press this button to select radio stations.

Press the up arrows to increase or the down arrows to decrease the radio frequencies.

⤒ ⤓ **SEEK:** Press this button to seek radio stations.

Press the up arrows to seek the next radio station or the down arrows to seek the previous radio station.

**SCAN/AST:** Press this button to scan radio stations. The radio goes to a station, plays for a few seconds, then goes to the next station. Press this button again to stop scanning.

The radio only scans stations with a strong signal that are in the selected band.

### AST (Automatic Store)

Six FM1 preset stations with the strongest reception in the region can be automatically stored. Press the AST button for more than two seconds. The display shows AUTO SCANNING and then SCANNING flashes on the display. Once the stations are stored, the radio switches to FM1 and the first preset station begins to play. FM-A appears on the display while listening to the automatic stored stations. Press the AM or FM button to cancel automatic store.

## Setting Preset Stations

Up to 24 stations (six FM1, six FM2, six AM1, and six AM2), can be programmed on the six numbered buttons, by performing the following steps:

1. Turn the radio on.
2. Press the AM or FM button to select FM1, FM2, AM1 or AM2.
3. Tune in the desired station.

4. Press and hold one of the six numbered buttons for more than two seconds. The preset button number one through six flashes on the display when the station has been set. Whenever that numbered preset button is pressed, that preset station returns.
5. Repeat the Steps 1 through 4 for each preset button.

## Order of Sound Function

The order for displayed sound function is BASS, TRE, BAL, FADE, EQ OFF, and VOL (Bass, Treble, Fade, Balance, Equalization Off, and Volume).

## Setting the Tone (Bass/Treble)

**SOUND (Bass/Treble):** Press this button until BAS (bass) appears on the display. Turn the volume knob to increase or to decrease the bass. The display shows the bass level. After making the selection, press this button to set the bass level selection.

Press this button until TRE (treble) appears on the display. Turn the volume knob to increase or to decrease the treble. The display shows the treble level. After making the selection, press this button to set the treble level selection. If a station is weak or has static, decrease the treble.

## Adjusting the Speakers (Balance/Fade)

**SOUND (Balance/Fade):** To adjust the balance between the right and the left speakers, press this button until BAL (balance) appears on the display. Turn the volume knob to increase or to decrease. The display shows the balance level. After making the selection, press this button to set the balance level.

To adjust the fade between the front and the rear speakers, press this button until FAD (fade) appears on the display. Turn the volume knob to increase or to decrease the fade between the front and the rear speakers. The display shows the fade level. After making the selection, press this button to set the fade level.

## Setting the Equalization

The order for displayed customized equalization settings are EQ OFF, CLASSIC, DANCE, ROCK, JAZZ, POP, VOICE, TECHNO, EQ OFF.

**SOUND (Equalization):** Press this button until EQ OFF (equalization) appears on the display to select customized equalization settings designed for classic, dance, rock, jazz, pop, voice and techno. Turn the volume knob until the desired equalization setting appears on the display. After making the selection, press the SOUND button to set the equalization setting.

To cancel an equalization setting, press the SOUND button until EQ OFF appears on the display, turn the volume knob until OFF appears on the display, then press the SOUND button again to set the equalization setting.

## Playing a CD

Insert a CD partway into the slot, label side up. The player pulls it in and the CD should begin playing. Insert a CD with the ignition off.

When a CD is inserted, CDP appears on the display. As the CD is loading, Filecheck appears on the display. As each new track starts to play, Track and the track number appears on the display.

If the ignition or radio is turned off with a CD in the player, it stays in the player. When a CD is in the player and the ignition is turned on, the radio must be turned on before the CD starts playback. When the ignition and radio are turned on, the CD starts playing where it stopped, if it was the last selected audio source.

The CD player can play the smaller 3 inch (8 cm) single CDs with an adapter ring. Full-size CDs and the smaller CDs are loaded in the same manner.

If playing a CD-R, the sound quality may be reduced due to CD-R quality, the method of recording, the quality of the music that has been recorded, and the way the CD-R has been handled. There may be an increase in skipping, difficulty in finding tracks, and/or difficulty in loading and ejecting. If these problems occur, check the bottom surface of the CD. If the surface of the CD is damaged, such as cracked, broken, or scratched, the CD will not play properly. If the surface of the CD is soiled, see *Care of Your CDs on page 217* for more information.

If there is no apparent damage, try a known good CD.

Do not add any label to a CD, it could get caught in the CD player. If a CD is recorded on a personal computer and a description label is needed, try labeling the top of the recorded CD with a marking pen.

***Notice:*** **If you add any label to a CD, insert more than one CD into the slot at a time, or attempt to play scratched or damaged CDs, you could damage the CD player. When using the CD player, use only CDs in good condition without any label, load one CD at a time, and keep the CD player and the loading slot free of foreign materials, liquids, and debris.**

If an error appears on the display, see “CD Messages” later in this section.

**2 RPT (Repeat):** Press this button to repeat the current track. RPT appears on the display. Press this button again to turn off repeat play.

**3 RDM (Random):** Press this button to hear the tracks in random, rather than sequential, order. RDM appears on the display. Press this button again to turn off random play.

**4 INT (Scan):** Press this button to listen to the first few seconds of each track on each loaded CD. INTRO appears on the display. To stop scanning press this button again. The current track begins to play.

**TUNE (Previous/Next Track):** Press the down arrows to go to the start of the current track or press the up arrows to go to the next track. The track number appears on the display. The player continues moving backward or forward through the CD with each press of the up or down arrows.

**AM:** Press this button to listen to the radio while a CD is playing. The inactive CD remains safely inside the radio for future listening.

**FM:** Press this button to listen to the radio while a CD is playing. The inactive CD remains safely inside the radio for future listening.

**CD/AUX:** Press this button to play a CD while listening to the radio. CDP appears on the display when the CD player has been selected. The CD symbol appears on the display when a CD is loaded.

Press this button while a CD is playing to pause the CD. PAUSE flashes on the display. Press this button again to start playing the CD.

**EJECT:** Press this button to eject a CD. This is the only way a CD can be ejected from the player. The CD can eject when the ignition or the radio is turned off.

## Playing an MP3/WMA CD-R Disc

If you have a radio with a single CD (MP3), it is capable of playing an MP3/WMA CD-R disc. For more information on how to play an MP3/WMA CD-R disc, see *Using an MP3 (Radio with CD Player) on page 208* or *Using an MP3 (Radio with Six-Disc Player) on page 212* later in this section.

## CD Messages

**CHECK CD:** If this message appears on the display and/or the CD comes out, it could be for one of the following reasons:

- It is very hot. When the temperature returns to normal, the CD should play.
- You are driving on a very rough road. When the road becomes smoother, the CD should play.
- The CD is dirty, scratched, wet, or upside down.
- The air is very humid. If so, wait about an hour and try again.
- The format of the CD may not be compatible. See *Using an MP3 (Radio with CD Player) on page 208* or *Using an MP3 (Radio with Six-Disc Player) on page 212* later in this section.
- There may have been a problem while burning the CD.
- The label may be caught in the CD player.

If the CD is not playing correctly, for any other reason, try a known good CD.

If any error occurs repeatedly or if an error cannot be corrected, contact your dealer. If the radio displays an error message, write it down and provide it to your dealer when reporting the problem.

## Using the Auxiliary Input Jack

Your radio system has an auxiliary input jack located on the lower right side of the faceplate. This is not an audio output. Do not plug the headphone set into the front auxiliary input jack. You can however, connect an external audio device such as an iPod, laptop computer, MP3 player, CD changer, or cassette tape player, etc. to the auxiliary input jack for use as another source for audio listening.

The auxiliary input jack also accepts cell phone connectors. Plug the cell phone connector into the auxiliary input jack to hear a person speaking on a cell phone during conversation through the vehicle sound system.

Drivers are encouraged to set up any auxiliary device while the vehicle is in PARK (P). See *Defensive Driving on page 220* for more information on driver distraction.

To use a portable audio player, connect a 3.5 mm (1/8 inch) cable to the radio's front auxiliary input jack. When a device is connected, turn the portable audio player on and press the radio CD/AUX button to hear audio from the device over the car speakers.

**CD/AUX (CD/Auxiliary):** Press this button once to play a CD while a portable audio device is playing. Press this button a second time for the system to begin playing audio from the connected portable audio player. Once in this mode, "Auxinput" appears on the display. If the auxiliary jack does not detect the presence of an output jack, the auxiliary mode does not display.

⏻ **(Power/Volume):** Turn this knob clockwise or counterclockwise to increase or decrease the volume of the portable player. Additional adjustments on a portable device may need to be made to get the desired volume.

## Radio with Six-Disc CD (MP3/WMA)

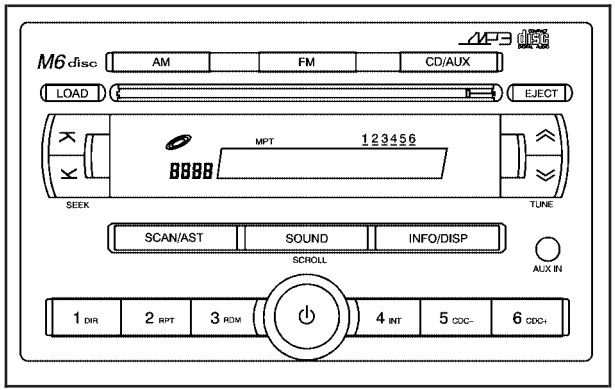


## Playing the Radio

⏻ **(Power/Volume):** Press and release this knob to turn the system on or off.

Turn the power/volume knob clockwise or counterclockwise to increase or decrease the volume.

Press and hold this knob for more than two seconds to silence the system. Press and release this knob again to turn the sound back on.

## Finding a Station

**AM:** Press this button to switch to an AM station. The display shows the selection.

**FM:** Press this button to switch to an FM station. The display shows the selection.

⌃ ⌄ **TUNE:** Press this button to select radio stations.

Press the up arrows to increase or the down arrows to decrease the radio frequencies.

⌅ ⌆ **SEEK:** Press this button to seek radio stations.

Press the up arrows to seek the next radio station or the down arrows to seek the previous radio station.

**SCAN/AST:** Press this button to scan radio stations. The radio goes to a station, plays for a few seconds, then goes to the next station. Press this button again to stop scanning.

The radio only scans stations with a strong signal that are in the selected band.

### AST (Automatic Store)

Six FM1 preset stations with the strongest reception in the region can be automatically stored. Press the AST button for more than one second. The display shows AUTO SCANNING and then SCANNING flashes on the display. Once the stations are stored, the radio switches to FM1 and the first preset station begins to play. FM-A appears on the display while listening to the automatic stored stations. Press the AM or FM button to cancel automatic store.

## Setting Preset Stations

Up to 36 stations (six FM1, six FM2, six FM-A, six AM1, six AM2, and six AM-A), can be programmed on the six numbered buttons, by performing the following steps:

1. Turn the radio on.
2. Press the AM or FM button to select FM1, FM2, FM-A, AM1, AM2, or AM-A.
3. Tune in the desired station.
4. Press and hold one of the six numbered pushbuttons for more than two seconds. The channel number (CH#1 through CH#6) flashes on the display when the station has been set. Whenever that numbered preset button is pressed, that preset station returns.
5. Repeat the Steps 1 through 4 for each preset button.

## Order of Sound Function

The order for displayed sound function is BASS, TRE, FAD, BAL, EQ OFF, and VOL (Bass, Treble, Fade, Balance, Equalization Off, and Volume).

## Setting the Tone (Bass/Midrange/Treble)

**SOUND (Bass/Midrange/Treble):** Press this button until BAS (bass) appears on the display. Turn the power/volume knob to increase or to decrease the bass. The display shows the bass level. After making the selection, press this button to select the bass level.

Press this button until MID (midrange) appears on the display. Turn the power/volume knob to increase or to decrease the midrange. The display shows the midrange level. After making the selection, press this button to select the midrange level.

Press this button until TRE (treble) appears on the display. Turn the power/volume knob to increase or to decrease the treble. The display shows the treble level. After making the selection, press this button to select the treble level. If a station is weak or has static, decrease the treble.

## Adjusting the Speakers (Balance/Fade)

**SOUND (Balance/Fade):** To adjust the balance between the right and the left speakers, press this button until BAL (balance) appears on the display. Turn the power/volume knob to increase or to decrease the balance. The display shows the balance level. After making the selection, press this button to select the balance level.

To adjust the fade between the front and the rear speakers, press this button until FAD (fade) appears on the display. Turn the power/volume knob to increase or to decrease the fade between the front and the rear speakers. The display shows the fade level. After making the selection, press this button to select the fade level.

## Setting the EQ (Equalization)

**SOUND (Equalization):** Press this button until EQ OFF (equalization) appears on the display to select customized equalization settings designed for classic, dance, rock, jazz, pop, voice, and techno. Turn the power/volume knob until the desired equalization setting appears on the display. After making the selection, press the SOUND button to select the equalization setting.

To cancel an equalization setting, press the SOUND button until EQ OFF appears on the display. Turn the power/volume knob until OFF appears on the display, then press the SOUND button again to select the equalization setting.

## Order of Sound Function

The order for displayed sound function is EQ OFF, CLASSIC, DANCE, ROCK, JAZZ, POP, VOICE, TECHNO, and EQ OFF.

## Playing a CD(s)

**LOAD:** Press this button to load CDs into the CD player. This CD player holds up to six CDs.

1. Press and release the load button. A message to select a slot number from 1 through 6 appears on display.
2. Press the desired slot number. Wait for the message to insert the disc.
3. Load a CD. Insert the CD partway into the slot, label side up. The player pulls the CD in.

To insert multiple CDs, do the following:

1. Press and hold the load button for two seconds. A beep will sound and a message to load multiple discs displays.
2. Follow the displayed instruction on when to insert the discs. The CD player takes up to six CDs.
3. Press the LOAD button again to cancel loading more CDs.

As each CD is inserted, CDP appears on the display. As each CD is loading, Filecheck appears on the display.

Once playback begins, the track and track number appears on the display.

If the ignition or radio is turned off with a CD in the player, it stays in the player. When a CD is in the player and the ignition is turned on, the radio must be turned on before the current CD starts playback. When the ignition and radio are turned on, the CD starts playing where it stopped, if it was the last selected audio source.

The CD player can play the smaller 3 inch (8 cm) single CDs with an adapter ring. Full-size CDs and the smaller CDs are loaded in the same manner.

If playing a CD-R, the sound quality may be reduced due to CD-R quality, the method of recording, the quality of the music that has been recorded, and the way the CD-R has been handled. There may be an increase in skipping, difficulty in finding tracks, and/or difficulty in loading and ejecting. If these problems occur, check the bottom surface of the CD. If the surface of the CD is damaged, such as cracked, broken, or scratched, the CD will not play properly. If the surface of the CD is soiled, see *Care of Your CDs on page 217* for more information.

If there is no apparent damage, try a known good CD.

Do not add any label to a CD, it could get caught in the CD player. If a CD is recorded on a personal computer and a description label is needed, try labeling the top of the recorded CD with a marking pen.

***Notice:*** **If you add any label to a CD, insert more than one CD into the slot at a time, or attempt to play scratched or damaged CDs, you could damage the CD player. When using the CD player, use only CDs in good condition without any label, load one CD at a time, and keep the CD player and the loading slot free of foreign materials, liquids, and debris.**

If an error appears on the display, see “CD Messages” later in this section.

**2 RPT (Repeat):** Press this button to repeat the current track. RPT appears on the display. Press this button again to turn off repeat play.

**3 RDM (Random):** Press this button to hear the tracks in random, rather than sequential, order. RDM appears on the display.

To play tracks from all CDs loaded in a six-disc CD player in random order, press this button until a message that all discs are randomized is displayed. Press the same button again to turn off random play.

**4 INT (Scan):** Press this button to listen to the first few seconds of each track on each loaded CD. INTRO appears on the display. To stop scanning press this button again. The current track begins to play.

**5 DSC – (Previous CDC):** Press this button to go back to the start of the previous CDC.

**6 DSC + (Next CDC):** Press this button to go forward to the start of the next CDC.

**TUNE (Previous/Next Track):** Press the down arrows to go to the start of the current track or press the up arrows to go to the next track. The track number appears on the display. The player continues moving backward or forward through the CD with each press of the up or down arrows.

**AM:** Press this button to listen to the radio while a CD is playing. The inactive CD remains inside the radio for future listening.

**FM:** Press this button to listen to the radio while a CD is playing. The inactive CD remains inside the radio for future listening.

**CD/AUX:** Press this button to play a CD while listening to the radio. CDP appears on the display when the CD player has been selected. The CD symbol appears on the display when a CD is loaded.

Press this button while a CD is playing to pause the CD. PAUSE flashes on the display. Press this button again to start playing the CD.

**EJECT:** Press this button to eject the CD. Press and hold this button to eject all CDs. This is the only way a CD can be ejected from the player. The CD can eject when the ignition or the radio is turned off.

## Playing an MP3/WMA CD-R Disc

If you have a radio with a six-disc CD player, it is capable of playing an MP3/WMA CD-R disc. For more information on how to play an MP3/WMA disc, see *Using an MP3 (Radio with CD Player) on page 208* or *Using an MP3 (Radio with Six-Disc Player) on page 212* later in this section.

## CD Messages

**CHECK CD:** If this message appears on the display and/or the CD comes out, it could be for one of the following reasons:

- It is very hot. When the temperature returns to normal, the CD should play.
- You are driving on a very rough road. When the road becomes smoother, the CD should play.
- The CD is dirty, scratched, wet, or upside down.
- The air is very humid. If so, wait about an hour and try again.
- The format of the CD may not be compatible. See *Using an MP3 (Radio with CD Player) on page 208* or *Using an MP3 (Radio with Six-Disc Player) on page 212* later in this section.
- There may have been a problem while burning the CD.
- The label may be caught in the CD player.

If the CD is not playing correctly, for any other reason, try a known good CD.

If any error occurs repeatedly or if an error cannot be corrected, contact your dealer. If the radio displays an error message, write it down and provide it to your dealer when reporting the problem.

## Using the Auxiliary Input Jack

**AUX IN (Auxiliary Input):** Your radio system has an auxiliary input jack located on the lower right side of the faceplate. This is not an audio output. Do not plug the headphone set into the front auxiliary input jack. You can however, connect an external audio device such as an iPod, laptop computer, MP3 player, CD changer, or XM™ receiver, etc. to the auxiliary input jack for use as another source for audio listening.

The auxiliary input jack also accepts cell phone connectors. Plug the cell phone connector into the auxiliary input jack to hear a person speck on a cell phone during a conversation through the vehicle sound system.

Drivers are encouraged to set up any auxiliary device while the vehicle is in PARK (P). See *Defensive Driving on page 220* for more information on driver distraction.

To use a portable audio player, connect a 3.5 mm (1/8 inch) cable to the radio's front auxiliary input jack. When a device is connected, turn the portable audio player on and press the radio CD/AUX button to hear audio from the device over the car speakers.

⏻ **(Power/Volume):** Turn this knob clockwise or counterclockwise to increase or decrease the volume of the portable player. Additional adjustments on a portable device may need to be made to get the desired volume.

**CD/AUX (CD/Auxiliary):** Press this button once to play a CD while a portable audio device is playing. Press this button a second time for the system to begin playing audio from the connected portable audio player. Once in this mode, "Auxinput" appears on the display. If the auxiliary jack does not detect the presence of an output jack, the auxiliary mode does not display.

# Using an MP3 (Radio with CD Player)

## MP3/WMA CD-R Disc

### MP3 Format

If you burn your own MP3/WMA disc on a personal computer:

- Make sure the MP3/WMA files are recorded on a CD-R disc.
- Do not mix standard audio and MP3/WMA files on one disc.
- Make sure each MP3/WMA file has a .m3u or .wma extension, other file extensions may not work.
- Files can be recorded with a variety of fixed or variable bit rates. Song title, artist name, and album are available for display by the radio when recorded using ID3 tags version 1 and 2.
- Create a folder structure that makes it easy to find songs while driving. Organize songs by albums using one folder for each album. Each folder or album should contain 18 songs or less.
- Make sure to finalize the disc when burning an MP3/WMA disc, using multiple sessions. It is usually better to burn the disc all at once.

The player is able to read and play a maximum of 50 folders, five sessions, and 999 files. Long file names and folder names may use more disc memory space than necessary. To conserve space on the disc, minimize the length of the file and folder names. You can also play an MP3/WMA CD that was recorded using no file folders. The system can support up to eight folders in depth, though, keep the depth of the folders to a minimum in order to keep down the complexity and confusion in trying to locate a particular folder during playback. If a CD contains more than the maximum of 50 folders, five sessions, and 999 files, the player lets you access and navigate up to the maximum, but all items over the maximum is ignored.

### Root Directory

The root directory is treated as a folder. If the root directory has compressed audio files, the directory is displayed as ROOT. All files contained directly under the root directory are accessed prior to any other directory.

## Empty Directory or Folder

If a root directory or a folder exists somewhere in the file structure that contains only folders/subfolders and no compressed files directly beneath them, the player advances to the next folder in the file structure that contains compressed audio files. The empty folder does not display.

## No Folder

When a CD contains only compressed files, the files are located under the root folder. The next and previous folder function does not function on a CD that was recorded without folders or playlists. When displaying the name of the folder the radio displays ROOT.

When a CD contains only compressed audio files, but no folders, all files are located under the root folder. When the radio displays the name of the folder, the radio displays ROOT.

## Order of Play

Tracks are played in the following order:

- Playback begins from the first track under the root directory.
- When all tracks from the root directory have played, playback continues from files, according to their numerical listing.
- After playing the last track from the last folder, the player begins playing again at the first track of the first folder or root directory.

## File System and Naming

The song name in the ID3 tag is displayed. If the song name is not present in the ID3 tag, then the radio displays the file name without the extension (such as MP3/WMA) instead.

Track names longer than 32 characters or four pages are shortened. Parts of words on the last page of text and the extension of the filename does not display.

## Playing an MP3/WMA

With the ignition on, insert a CD partway into the slot, label side up. The player pulls it in, Loading, then Filecheck, and then MP3 or WMA appears on the display. The CD should begin playing. You cannot insert a CD with the ACC (accessory) off.

As each new track starts to play, the track number, and the song name appears on the display.

If the ignition or radio is turned off with a CD in the player, it stays in the player. When a CD is in the player and the ignition is turned on, the radio must be turned on before the CD starts playback. When the ignition and radio are turned on, the CD starts playing where it stopped, if it was the last selected audio source.

The CD player can play the smaller 3 inch (8 cm) single CDs with an adapter ring. Full-size CDs and the smaller CDs are loaded in the same manner.

If playing a CD-R, the sound quality may be reduced due to CD-R quality, the method of recording, the quality of the music that has been recorded, and the way the CD-R has been handled.

There may be an increase in skipping, difficulty in finding tracks, and/or difficulty in loading and ejecting. If these problems occur, check the bottom surface of the CD. If the surface of the CD is damaged, such as cracked, broken, or scratched, the CD will not play properly. If the surface of the CD is soiled, see *Care of Your CDs on page 217* for more information.

If there is no apparent damage, try a known good CD.

Do not add any label to a CD, it could get caught in the CD player. If a CD is recorded on a personal computer and a description label is needed, try labeling the top of the recorded CD with a marking pen.

***Notice:*** **If you add any label to a CD, insert more than one CD into the slot at a time, or attempt to play scratched or damaged CDs, you could damage the CD player. When using the CD player, use only CDs in good condition without any label, load one CD at a time, and keep the CD player and the loading slot free of foreign materials, liquids, and debris.**

If an error appears on the display, see “CD Messages” later in this section.

All of the CD functions work the same while playing an MP3/WMA, except for those listed here. See “Playing a CD” earlier for more information.

**SCROLL (MP3/WMA Mode Only):** Press the SOUND button for longer than two seconds. The song title or other available information of a song scrolls on/off. The offset is scroll on. The scroll mode can be changed only when the SOUND button is pressed for longer than two seconds.

**DIR (Directory):** Press this button to repeat the tracks in the current directory. DIR appears on the display.

Press this button again to repeat the tracks in all of the directories. ALL appears on the display.

Press this button again to turn off repeat play.

**SEEK (Previous/Next Folder) (in MP3/WMA Mode):** Press the up or down arrows to change the folder. If CD-R does not have any folder, “ROOT” flashes on the display for a short time.

**TUNE (Previous/Next Track):** Press the down arrows to go to the start of the current track or press the up arrows to go to the next track. The track number appears on the display. The player continues moving backward or forward through the CD with each press of the up or down arrows.

**INFO/DISP (Information/Display):** Press this button to display additional text information related to the current MP3/WMA song. A choice of additional information such as: Song Title, Album Title, and Artist. Bit rate may also appear on display.

When information is not available, No Info (information) appears on the display.

Press this button for longer than two seconds to change display mode.

# Using an MP3 (Radio with Six-Disc Player)

## MP3/WMA CD-R Disc

### MP3 Format

If you burn your own MP3/WMA disc on a personal computer:

- Make sure the MP3/WMA files are recorded on a CD-R disc.
- Do not mix standard audio and MP3/WMA files on one disc.
- Make sure each MP3/WMA file has a .m3u or .wma extension, other file extensions may not work.
- Files can be recorded with a variety of fixed or variable bit rates. Song title, artist name, and album are available for display by the radio when recorded using ID3 tags version 1 and 2.
- Create a folder structure that makes it easy to find songs while driving. Organize songs by albums using one folder for each album. Each folder or album should contain 18 songs or less.
- Make sure to finalize the disc when burning an MP3/WMA disc, using multiple sessions. It is usually better to burn the disc all at once.

The player is able to read and play a maximum of 50 folders, five sessions, and 999 files. Long file names and folder names may use more disc memory space than necessary. To conserve space on the disc, minimize the length of the file and folder names. You can also play an MP3/WMA CD that was recorded using no file folders. The system can support up to eight folders in depth, though, keep the depth of the folders to a minimum in order to keep down the difficulty and confusion in trying to locate a particular folder during playback. If a CD contains more than the maximum of 50 folders, five sessions, and 999 files, the player lets you access and navigate up to the maximum, but all items over the maximum is ignored.

### Root Directory

The root directory is treated as a folder. If the root directory has compressed audio files, the directory is displayed as ROOT. All files contained directly under the root directory are accessed prior to any other directory.

## Empty Directory or Folder

If a root directory or a folder exists somewhere in the file structure that contains only folders/subfolders and no compressed files directly beneath them, the player advances to the next folder in the file structure that contains compressed audio files. The empty folder does not display.

## No Folder

When a CD contains only compressed files, the files are located under the root folder. The next and previous folder function does not function on a CD that was recorded without folders or playlists. When displaying the name of the folder the radio displays ROOT.

When a CD contains only compressed audio files, but no folders, all files are located under the root folder. When the radio displays the name of the folder, the radio displays ROOT.

## Order of Play

Tracks is played in the following order:

- Playback begins from the first track under the root directory.
- When all tracks from the root directory have played, playback continues from files, according to their numerical listing.
- After playing the last track from the last folder, the player begins playing again at the first track of the first folder or root directory.

## File System and Naming

The song name in the ID3 tag is displayed. If the song name is not present in the ID3 tag, then the radio displays the file name without the extension (such as MP3/WMA) instead.

Track names longer than 32 characters or four pages are shortened. Parts of words on the last page of text and the extension of the filename does not display.

## Playing an MP3/WMA

With the ignition on, insert a CD partway into the slot, label side up. The player pulls it in, Loading, then Filecheck, and then MP3 or WMA appears on the display. The CD should begin playing. You cannot insert a CD with the ACC (accessory) off.

As each new track starts to play, the track number, and the song name appears on the display.

If the ignition or radio is turned off with a CD in the player, it stays in the player. When a CD is in the player and the ignition is turned on, the radio must be turned on before the CD starts playback. When the ignition and radio are turned on, the CD starts playing where it stopped, if it was the last selected audio source.

The CD player can play the smaller 3 inch (8 cm) single CDs with an adapter ring. Full-size CDs and the smaller CDs are loaded in the same manner.

If playing a CD-R, the sound quality may be reduced due to CD-R quality, the method of recording, the quality of the music that has been recorded, and the way the CD-R has been handled.

There may be an increase in skipping, difficulty in finding tracks, and/or difficulty in loading and ejecting. If these problems occur, check the bottom surface of the CD. If the surface of the CD is damaged, such as cracked, broken, or scratched, the CD will not play properly. If the surface of the CD is soiled, see *Care of Your CDs on page 217* for more information.

If there is no apparent damage, try a known good CD.

Do not add any label to a CD, it could get caught in the CD player. If a CD is recorded on a personal computer and a description label is needed, try labeling the top of the recorded CD with a marking pen.

***Notice:*** **If you add any label to a CD, insert more than one CD into the slot at a time, or attempt to play scratched or damaged CDs, you could damage the CD player. When using the CD player, use only CDs in good condition without any label, load one CD at a time, and keep the CD player and the loading slot free of foreign materials, liquids, and debris.**

If an error appears on the display, see “CD Messages” later in this section.

All of the CD functions work the same while playing an MP3/WMA, except for those listed here. See “Playing a CD” earlier for more information.

**SCROLL (MP3/WMA Mode Only):** Press the SOUND button for longer than two seconds. The song title and other available information of the song scrolls on/off. The offset is scroll on. The scroll mode can be changed only when the SOUND button is pressed for longer than two seconds.

**1 DIR (Directory):** Press this button to repeat the tracks in the current directory. DIR appears on the display.

Press this button again to repeat the tracks in all of the directories. ALL appears on the display.

Press this button again to turn off repeat play.

**⌅ ⌄ SEEK (Previous/Next Folder) (in MP3/WMA Mode):** Press the up or down arrows to change the folder. If CD-R does not have any folder, “ROOT” flashes on the display for a short time.

**⌃ ⌄ TUNE (Previous/Next Track):** Press the down arrows to go to the start of the current track or press the up arrows to go to the next track. The track number appears on the display. The player continues moving backward or forward through the CD with each press of the up or down arrows.

**INFO/DISP (Information/Display):** Press this button to display additional text information related to the current MP3/WMA song. A choice of additional information such as: Song Title, Album Title, and Artist. Bit rate may also appear on display.

When information is not available, No Info (information) appears on the display.

Press this button for longer than two seconds to change display mode.

## Audio Steering Wheel Controls

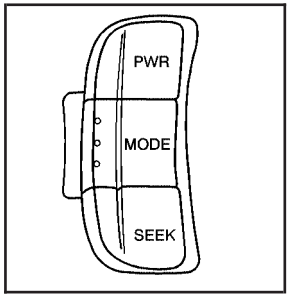


**Front View of the Steering Wheel Controls**

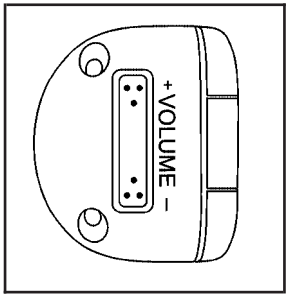


**Side View of the Volume Control**

If your vehicle has this feature, some audio controls can be adjusted at the steering wheel. They include the following:

**PWR (Power):** Press this button to turn the audio system on or off.

Press and hold this button for less than two seconds to silence the system. Press and release this button again to turn the sound back on.

**+ VOLUME – :** Press the toggle bar located below the + VOLUME – to adjust the volume. Press the left side of the toggle bar, below the + (plus) sign to increase the volume. Press the right side of the toggle bar, below the – (minus) sign to decrease the volume.

**SEEK:** Press and release this button within 0.5 seconds to go to the next preset station.

Press and hold this button for longer than 0.5 seconds to go to the next radio station. The radio will only seek stations with a strong signal that are in the selected band.

When playing a CD, press and release this button within 0.5 seconds to go to the next track. Press and hold this button for longer than 0.5 seconds to fast forward through the tracks.

**MODE:** Press and release this button to select FM1, FM2, FM-A, AM1, AM2, AM-A, or CD (MP3). Press and release this button multiple times to cycle through the audio playback options that are available on your vehicle.

## Radio Reception

You may experience frequency interference and static during normal radio reception if items such as cellphone chargers, vehicle convenience accessories, and external electronic devices are plugged into the accessory power outlet. If there is interference or static, unplug the item from the accessory power outlet.

### AM

The range for most AM stations is greater than for FM, especially at night. The longer range can cause station frequencies to interfere with each other. For better radio reception, most AM radio stations will boost the power levels during the day, and then reduce these levels during the night. Static can also occur when things like storms and power lines interfere with radio reception. When this happens, try reducing the treble on your radio.

### FM Stereo

FM stereo will give the best sound, but FM signals will reach only about 10 to 40 miles (16 to 65 km). Tall buildings or hills can interfere with FM signals, causing the sound to fade in and out.

## Care of Your CDs

Handle CDs carefully. Store them in their original cases or other protective cases and away from direct sunlight and dust. The CD player scans the bottom surface of the disc. If the surface of a CD is damaged, such as cracked, broken, or scratched, the CD will not play properly or not at all. If the surface of a CD is soiled, take a soft, lint free cloth or dampen a clean, soft cloth in a mild, neutral detergent solution mixed with water, and clean it. Make sure the wiping process starts from the center to the edge.

Do not touch the bottom side of a CD while handling it; this could damage the surface. Pick up CDs by grasping the outer edges or the edge of the hole and the outer edge.

## Care of the CD Player

The use of CD lens cleaners for CD players is not advised, due to the risk of contaminating the internal lens of the CD optics with lubricants.

## Fixed Mast Antenna (Hatchback)

The fixed mast antenna can withstand most car washes without being damaged. If the mast should ever become slightly bent, straighten it out by hand. If the mast is badly bent, replace it.

Check occasionally to make sure the mast is still tightened to the antenna base located on the roof of the vehicle. If tightening is required, tighten by hand.

## Backglass Antenna (Sedan)

The AM-FM antenna is integrated with the rear window defogger, located in the rear window. Make sure that the inside surface of the rear window is not scratched and that the lines on the glass are not damaged. If the inside surface is damaged, it could interfere with radio reception. Also, for proper radio reception, the antenna connector at the top-center of the rear window needs to be properly attached to the post on the glass.

***Notice:*** **Do not apply aftermarket glass tinting with metallic film. The metallic film in some tinting materials will interfere with or distort the incoming radio reception. Any damage caused to your backglass antenna due to metallic tinting materials will not be covered by your warranty.**

***Notice:*** **Using a razor blade or sharp object to clear the inside rear window may damage the rear window antenna and/or the rear window defogger. Repairs would not be covered by your warranty. Do not clear the inside rear window with sharp objects.**

Because this antenna is built into your rear window, there is a reduced risk of damage caused by car washes and vandals.

If static is heard on the radio, when the rear window defogger is turned on, it could mean that a defogger grid line has been damaged. If this is true, the grid line must be repaired.

If you choose to add a cellular telephone to your vehicle, and the antenna needs to be attached to the glass, make sure that you do not damage the grid lines for the AM-FM antenna. There is enough space between the lines to attach a cellular telephone antenna without interfering with radio reception.

# Section 4 Driving Your Vehicle

**Your Driving, the Road, and Your Vehicle** .... 220
Defensive Driving ..... 220
Drunken Driving ..... 221
Control of a Vehicle ..... 224
Braking ..... 224
Anti-Lock Brake System (ABS) ..... 225
Braking in Emergencies ..... 227
Steering ..... 227
Off-Road Recovery ..... 230
Passing ..... 230
Loss of Control ..... 232
Driving at Night ..... 233
Driving in Rain and on Wet Roads ..... 234
City Driving ..... 237
Freeway Driving ..... 238
Before Leaving on a Long Trip ..... 239
Highway Hypnosis ..... 240
Hill and Mountain Roads ..... 240
Winter Driving ..... 242
If Your Vehicle is Stuck in Sand, Mud, Ice, or Snow ..... 247
Rocking Your Vehicle to Get It Out ..... 248
Loading Your Vehicle ..... 248
**Towing** ..... 257
Towing Your Vehicle ..... 257
Recreational Vehicle Towing ..... 257
Towing a Trailer ..... 259

# Your Driving, the Road, and Your Vehicle

## Defensive Driving

The best advice anyone can give about driving is: Drive defensively.

Please start with a very important safety device in your vehicle: Buckle up. See *Safety Belts: They Are for Everyone on page 19*.

**⚠ CAUTION:**

**Defensive driving really means "Be ready for anything." On city streets, rural roads, or expressways, it means "Always expect the unexpected." Assume that pedestrians or other drivers are going to be careless and make mistakes. Anticipate what they might do and be ready. Rear-end collisions are about the most preventable of accidents. Yet they are common. Allow enough following distance. Defensive driving requires that a driver concentrate on the driving task. Anything that distracts from the driving task makes proper defensive driving more difficult and can even cause a collision, with resulting injury. Ask a passenger to help do these things, or pull off the road in a safe place to do them. These simple defensive driving techniques could save your life.**

## Drunken Driving

Death and injury associated with drinking and driving is a national tragedy. It is the number one contributor to the highway death toll, claiming thousands of victims every year.

Alcohol affects four things that anyone needs to drive a vehicle:

- Judgment
- Muscular Coordination
- Vision
- Attentiveness

Police records show that almost half of all motor vehicle-related deaths involve alcohol. In most cases, these deaths are the result of someone who was drinking and driving. In recent years, more than 16,000 annual motor vehicle-related deaths have been associated with the use of alcohol, with more than 300,000 people injured.

Many adults — by some estimates, nearly half the adult population — choose never to drink alcohol, so they never drive after drinking. For persons under 21, it is against the law in every U.S. state to drink alcohol. There are good medical, psychological, and developmental reasons for these laws.

The obvious way to eliminate the leading highway safety problem is for people never to drink alcohol and then drive. But what if people do? How much is “too much” if someone plans to drive? It is a lot less than many might think. Although it depends on each person and situation, here is some general information on the problem.

The Blood Alcohol Concentration (BAC) of someone who is drinking depends upon four things:

- The amount of alcohol consumed
- The drinker’s body weight
- The amount of food that is consumed before and during drinking
- The length of time it has taken the drinker to consume the alcohol

According to the American Medical Association, a 180 lb (82 kg) person who drinks three 12 ounce (355 ml) bottles of beer in an hour will end up with a BAC of about 0.06 percent. The person would reach the same BAC by drinking three 4 ounce (120 ml) glasses of wine or three mixed drinks if each had 1-1/2 ounces (45 ml) of liquors like whiskey, gin, or vodka.

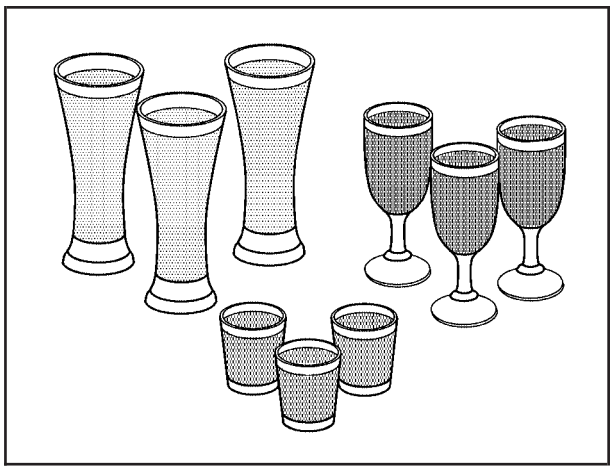

It is the amount of alcohol that counts. For example, if the same person drank three double martinis (3 ounces or 90 ml of liquor each) within an hour, the person's BAC would be close to 0.12 percent. A person who consumes food just before or during drinking will have a somewhat lower BAC level.

There is a gender difference, too. Women generally have a lower relative percentage of body water than men. Since alcohol is carried in body water, this means that a woman generally will reach a higher BAC level than a man of her same body weight will when each has the same number of drinks.

The law in most U.S. states, and throughout Canada, sets the legal limit at 0.08 percent. In some other countries, the limit is even lower. For example, it is 0.05 percent in both France and Germany. The BAC limit for all commercial drivers in the United States is 0.04 percent.

The BAC will be over 0.10 percent after three to six drinks (in one hour). Of course, as we have seen, it depends on how much alcohol is in the drinks, and how quickly the person drinks them.

But the ability to drive is affected well below a BAC of 0.10 percent. Research shows that the driving skills of many people are impaired at a BAC approaching 0.05 percent, and that the effects are worse at night. All drivers are impaired at BAC levels above 0.05 percent. Statistics show that the chance of being in a collision increases sharply for drivers who have a BAC of 0.05 percent or above. A driver with a BAC level of 0.06 percent has doubled his or her chance of having a collision. At a BAC level of 0.10 percent, the chance of this driver having a collision is 12 times greater; at a level of 0.15 percent, the chance is 25 times greater!

The body takes about an hour to rid itself of the alcohol in one drink. No amount of coffee or number of cold showers will speed that up. “I will be careful” is not the right answer. What if there is an emergency, a need to take sudden action, as when a child darts into the street? A person with even a moderate BAC might not be able to react quickly enough to avoid the collision.

There is something else about drinking and driving that many people do not know. Medical research shows that alcohol in a person’s system can make crash injuries worse, especially injuries to the brain, spinal cord, or heart. This means that when anyone who has been drinking — driver or passenger — is in a crash, that person’s chance of being killed or permanently disabled is higher than if the person had not been drinking.

**⚠ CAUTION:**

**Drinking and then driving is very dangerous. Your reflexes, perceptions, attentiveness, and judgment can be affected by even a small amount of alcohol. You can have a serious — or even fatal — collision if you drive after drinking. Please do not drink and drive or ride with a driver who has been drinking. Ride home in a cab; or if you are with a group, designate a driver who will not drink.**

## Control of a Vehicle

You have three systems that make your vehicle go where you want it to go. They are the brakes, the steering, and the accelerator. All three systems have to do their work at the places where the tires meet the road.

Sometimes, as when you are driving on snow or ice, it is easy to ask more of those control systems than the tires and road can provide. That means you can lose control of your vehicle.

Adding non-GM accessories can affect your vehicle's performance. See *Accessories and Modifications on page 264*.

## Braking

See *Brake System Warning Light on page 164*.

Braking action involves perception time and reaction time.

First, you have to decide to push on the brake pedal. That is perception time. Then you have to bring up your foot and do it. That is reaction time.

Average reaction time is about three-fourths of a second. But that is only an average. It might be less with one driver and as long as two or three seconds or more with another. Age, physical condition, alertness, coordination, and eyesight all play a part. So do alcohol, drugs, and frustration. But even in three-fourths of a second, a vehicle moving at 60 mph (100 km/h) travels 66 feet (20 m). That could be a lot of distance in an emergency, so keeping enough space between your vehicle and others is important.

And, of course, actual stopping distances vary greatly with the surface of the road, whether it is pavement or gravel; the condition of the road, whether it is wet, dry, or icy; tire tread; the condition of the brakes; the weight of the vehicle; and the amount of brake force applied.

Avoid needless heavy braking. Some people drive in spurts — heavy acceleration followed by heavy braking — rather than keeping pace with traffic. This is a mistake. The brakes may not have time to cool between hard stops. The brakes will wear out much faster if you do a lot of heavy braking. If you keep pace with the traffic and allow realistic following distances, you will eliminate a lot of unnecessary braking. That means better braking and longer brake life.

If your vehicle's engine ever stops while you are driving, brake normally but do not pump the brakes. If you do, the pedal may get harder to push down. If the engine stops, you will still have some power brake assist. But you will use it when you brake. Once the power assist is used up, it may take longer to stop and the brake pedal will be harder to push.

Adding non-GM accessories can affect your vehicle's performance. See *Accessories and Modifications on page 264*.

## Anti-Lock Brake System (ABS)

Your vehicle may have the Anti-Lock Brake System (ABS), an advanced electronic braking system that will help prevent a braking skid.

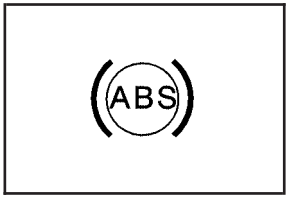


If your vehicle has ABS, this warning light will come on briefly when you start your vehicle.

The warning light is on the instrument panel cluster for a sedan. See *Anti-Lock Brake System Warning Light on page 180*. For hatchback models, the warning light is on the Secondary Information Center (SIC). See *Anti-Lock Brake System Warning Light on page 180*.

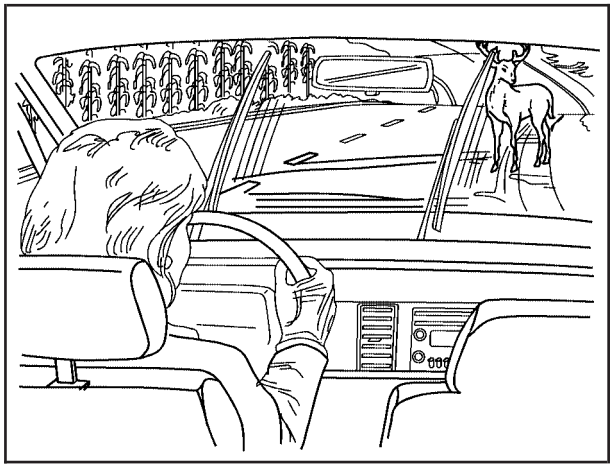

Let us say the road is wet and you are driving safely. Suddenly, an animal jumps out in front of you. You slam on the brakes and continue braking. Here is what happens with ABS:

A computer senses that wheels are slowing down. If one of the wheels is about to stop rolling, the computer will separately work the brakes at each wheel.

ABS can change the brake pressure faster than any driver could. The computer is programmed to make the most of available tire and road conditions. This can help you steer around the obstacle while braking hard.

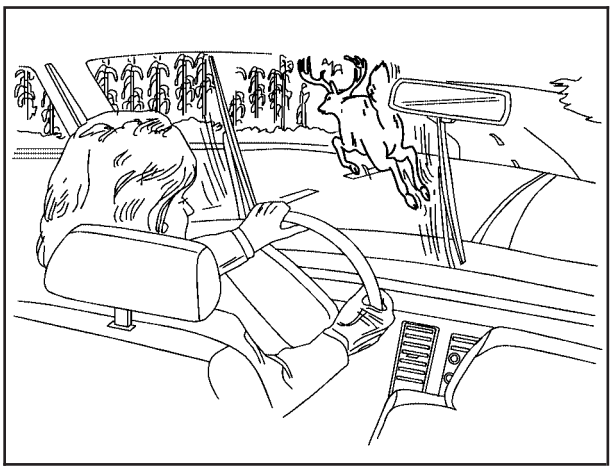

As you brake, your computer keeps receiving updates on wheel speed and controls braking pressure accordingly.

Remember: ABS does not change the time you need to get your foot up to the brake pedal or always decrease stopping distance. If you get too close to the vehicle in front of you, you will not have time to apply your brakes if that vehicle suddenly slows or stops. Always leave enough room up ahead to stop, even though you have ABS.

### Using ABS

Do not pump the brakes. Just hold the brake pedal down firmly and let anti-lock work for you. You may feel a slight brake pedal pulsation or notice some noise, but this is normal.

## Braking in Emergencies

At some time, nearly every driver gets into a situation that requires hard braking.

If you have ABS, you can steer and brake at the same time. However, if you do not have ABS, your first reaction — to hit the brake pedal hard and hold it down — may be the wrong thing to do. Your wheels can stop rolling. Once they do, the vehicle cannot respond to your steering. Momentum will carry it in whatever direction it was headed when the wheels stopped rolling. That could be off the road, into the very thing you were trying to avoid, or into traffic.

If you do not have ABS, use a “squeeze” braking technique. This will give you maximum braking while maintaining steering control. You can do this by pushing on the brake pedal with steadily increasing pressure.

In an emergency, you will probably want to squeeze the brakes hard without locking the wheels. If you hear or feel the wheels sliding, ease off the brake pedal. This will help you retain steering control. If you do have ABS, it is different. See *Anti-Lock Brake System (ABS) on page 225*.

In many emergencies, steering can help you more than even the very best braking.

## Steering

### Power Steering

If you lose power steering assist because the engine stops or the system is not functioning, you can steer but it will take much more effort.

## Steering Tips

It is important to take curves at a reasonable speed.

A lot of the “driver lost control” accidents mentioned on the news happen on curves.

Here is why:

Experienced driver or beginner, each of us is subject to the same laws of physics when driving on curves. The traction of the tires against the road surface makes it possible for the vehicle to change its path when you turn the front wheels. If there is no traction, inertia will keep the vehicle going in the same direction. If you have ever tried to steer a vehicle on wet ice, you will understand this.

The traction you can get in a curve depends on the condition of your tires and the road surface, the angle at which the curve is banked, and your speed. While you are in a curve, speed is the one factor you can control.

Suppose you are steering through a sharp curve. Then you suddenly apply the brakes. Both control systems — steering and braking — have to do their work where the tires meet the road. Unless you have four-wheel anti-lock brakes, adding the hard braking can demand too much of those places. You can lose control.

The same thing can happen if you are steering through a sharp curve and you suddenly accelerate. Those two control systems — steering and acceleration — can overwhelm those places where the tires meet the road and make you lose control.

What should you do if this ever happens? Ease up on the brake or accelerator pedal, steer the vehicle the way you want it to go, and slow down.

Speed limit signs near curves warn that you should adjust your speed. Of course, the posted speeds are based on good weather and road conditions. Under less favorable conditions you will want to go slower.

If you need to reduce your speed as you approach a curve, do it before you enter the curve, while your front wheels are straight ahead.

Try to adjust your speed so you can “drive” through the curve. Maintain a reasonable, steady speed. Wait to accelerate until you are out of the curve, and then accelerate gently into the straightaway.

Adding non-GM accessories can affect your vehicle’s performance. See *Accessories and Modifications on page 264*.

## Steering in Emergencies

There are times when steering can be more effective than braking. For example, you come over a hill and find a truck stopped in your lane, or a car suddenly pulls out from nowhere, or a child darts out from between parked cars and stops right in front of you. You can avoid these problems by braking — if you can stop in time. But sometimes you cannot; there is not room. That is the time for evasive action — steering around the problem.

Your vehicle can perform very well in emergencies like these. First apply your brakes — but, unless you have anti-lock brakes, not enough to lock your wheels.

See *Braking on page 224*. It is better to remove as much speed as you can from a possible collision. Then steer around the problem, to the left or right depending on the space available.

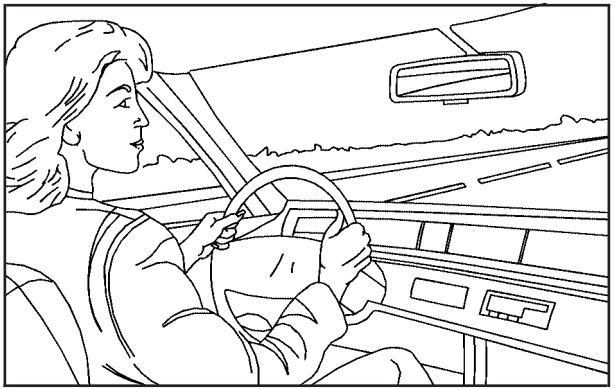

An emergency like this requires close attention and a quick decision. If you are holding the steering wheel at the recommended 9 and 3 o'clock positions, you can turn it a full 180 degrees very quickly without removing either hand. But you have to act fast, steer quickly, and just as quickly straighten the wheel once you have avoided the object.

The fact that such emergency situations are always possible is a good reason to practice defensive driving at all times and wear safety belts properly.

## Off-Road Recovery

You may find that your right wheels have dropped off the edge of a road onto the shoulder while you are driving.

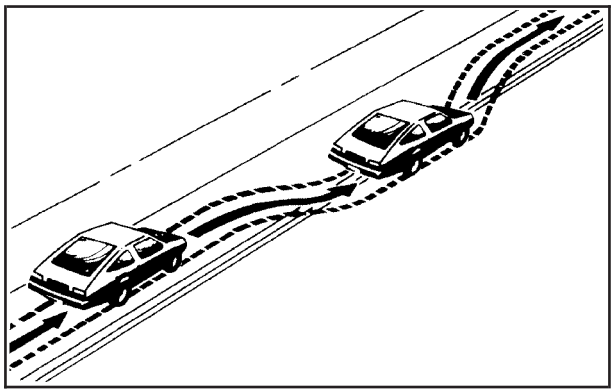

If the level of the shoulder is only slightly below the pavement, recovery should be fairly easy. Ease off the accelerator and then, if there is nothing in the way, steer so that your vehicle straddles the edge of the pavement. You can turn the steering wheel up to one-quarter turn until the right front tire contacts the pavement edge. Then turn your steering wheel to go straight down the roadway.

## Passing

The driver of a vehicle about to pass another on a two-lane highway waits for just the right moment, accelerates, moves around the vehicle ahead, then goes back into the right lane again. A simple maneuver?

Not necessarily! Passing another vehicle on a two-lane highway is a potentially dangerous move, since the passing vehicle occupies the same lane as oncoming traffic for several seconds. A miscalculation, an error in judgment, or a brief surrender to frustration or anger can suddenly put the passing driver face to face with the worst of all traffic accidents — the head-on collision.

So here are some tips for passing:

- Drive ahead. Look down the road, to the sides, and to crossroads for situations that might affect your passing patterns. If you have any doubt whatsoever about making a successful pass, wait for a better time.

- Watch for traffic signs, pavement markings, and lines. If you can see a sign up ahead that might indicate a turn or an intersection, delay your pass. A broken center line usually indicates it is all right to pass, providing the road ahead is clear. Never cross a solid line on your side of the lane or a double solid line, even if the road seems empty of approaching traffic.
- Do not get too close to the vehicle you want to pass while you are awaiting an opportunity. For one thing, following too closely reduces your area of vision, especially if you are following a larger vehicle. Also, you will not have adequate space if the vehicle ahead suddenly slows or stops. Keep back a reasonable distance.
- When it looks like a chance to pass is coming up, start to accelerate but stay in the right lane and do not get too close. Time your move so you will be increasing speed as the time comes to move into the other lane. If the way is clear to pass, you will have a running start that more than makes up for the distance you would lose by dropping back. And if something happens to cause you to cancel your pass, you need only slow down and drop back again and wait for another opportunity.
- If other vehicles are lined up to pass a slow vehicle, wait your turn. But take care that someone is not trying to pass you as you pull out to pass the slow vehicle. Remember to glance over your shoulder and check the blind spot.
- Check your vehicle's mirrors, glance over your shoulder, and start your left lane change signal before moving out of the right lane to pass. When you are far enough ahead of the passed vehicle to see its front in your vehicle's inside mirror, activate the right lane change signal and move back into the right lane. Remember that your vehicle's passenger side outside mirror is convex. The vehicle you just passed may seem to be farther away from you than it really is.
- Try not to pass more than one vehicle at a time on two-lane roads. Reconsider before passing the next vehicle.
- Do not overtake a slowly moving vehicle too rapidly. Even though the brake lamps are not flashing, it may be slowing down or starting to turn.
- If you are being passed, make it easy for the following driver to get ahead of you. Perhaps you can ease a little to the right.

## Loss of Control

Let us review what driving experts say about what happens when the three control systems — brakes, steering, and acceleration — do not have enough friction where the tires meet the road to do what the driver has asked.

In any emergency, do not give up. Keep trying to steer and constantly seek an escape route or area of less danger.

### Skidding

In a skid, a driver can lose control of the vehicle. Defensive drivers avoid most skids by taking reasonable care suited to existing conditions, and by not overdriving those conditions. But skids are always possible.

The three types of skids correspond to your vehicle's three control systems. In the braking skid, your wheels are not rolling. In the steering or cornering skid, too much speed or steering in a curve causes tires to slip and lose cornering force. And in the acceleration skid, too much throttle causes the driving wheels to spin.

A cornering skid and an acceleration skid are best handled by easing your foot off the accelerator pedal.

If your vehicle starts to slide, ease your foot off the accelerator pedal and quickly steer the way you want the vehicle to go. If you start steering quickly enough, your vehicle may straighten out. Always be ready for a second skid if it occurs.

Of course, traction is reduced when water, snow, ice, gravel, or other material is on the road. For safety, you will want to slow down and adjust your driving to these conditions. It is important to slow down on slippery surfaces because stopping distance will be longer and vehicle control more limited.

While driving on a surface with reduced traction, try your best to avoid sudden steering, acceleration, or braking, including reducing vehicle speed by shifting to a lower gear. Any sudden changes could cause the tires to slide. You may not realize the surface is slippery until your vehicle is skidding. Learn to recognize warning clues — such as enough water, ice, or packed snow on the road to make a mirrored surface — and slow down when you have any doubt.

If you have the Anti-Lock Brake System (ABS), remember: It helps avoid only the braking skid. If you do not have ABS, then in a braking skid, where the wheels are no longer rolling, release enough pressure on the brakes to get the wheels rolling again. This restores steering control. Push the brake pedal down steadily when you have to stop suddenly. As long as the wheels are rolling, you will have steering control.

## Driving at Night

Night driving is more dangerous than day driving. One reason is that some drivers are likely to be impaired — by alcohol or drugs, with night vision problems, or by fatigue.

Here are some tips on night driving.

- Drive defensively.
- Do not drink and drive.
- Adjust the inside rearview mirror to reduce the glare from headlamps behind you.
- Since you cannot see as well, you may need to slow down and keep more space between you and other vehicles.
- Slow down, especially on higher speed roads. Your vehicle's headlamps can light up only so much road ahead.
- In remote areas, watch for animals.
- If you are tired, pull off the road in a safe place and rest.

No one can see as well at night as in the daytime. But as we get older these differences increase. A 50-year-old driver may require at least twice as much light to see the same thing at night as a 20-year-old.

What you do in the daytime can also affect your night vision. For example, if you spend the day in bright sunshine you are wise to wear sunglasses. Your eyes will have less trouble adjusting to night. But if you are driving, do not wear sunglasses at night. They may cut down on glare from headlamps, but they also make a lot of things invisible.

You can be temporarily blinded by approaching headlamps. It can take a second or two, or even several seconds, for your eyes to re-adjust to the dark. When you are faced with severe glare, as from a driver who does not lower the high beams, or a vehicle with misaimed headlamps, slow down a little. Avoid staring directly into the approaching headlamps.

Keep the windshield and all the glass on your vehicle clean — inside and out. Glare at night is made much worse by dirt on the glass. Even the inside of the glass can build up a film caused by dust. Dirty glass makes lights dazzle and flash more than clean glass would, making the pupils of your eyes contract repeatedly.

Remember that the headlamps light up far less of a roadway when you are in a turn or curve. Keep your eyes moving; that way, it is easier to pick out dimly lighted objects. Just as the headlamps should be checked regularly for proper aim, so should your eyes be examined regularly. Some drivers suffer from night blindness — the inability to see in dim light — and are not even aware of it.

## Driving in Rain and on Wet Roads

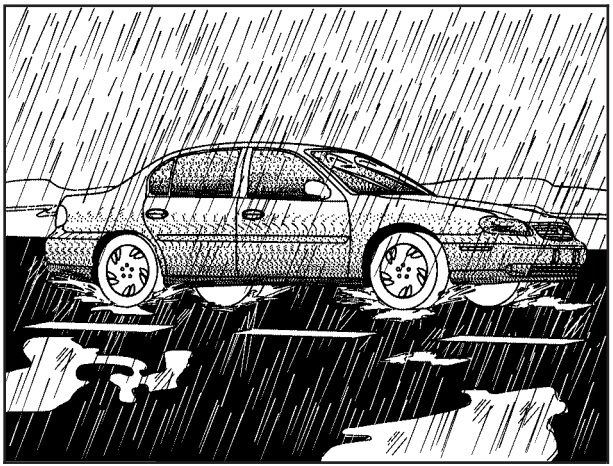

Rain and wet roads can mean driving trouble. On a wet road, you cannot stop, accelerate, or turn as well because your tire-to-road traction is not as good as on dry roads. And, if your tires do not have much tread left, you will get even less traction. It is always wise to go slower and be cautious if rain starts to fall while you are driving. The surface may get wet suddenly when your reflexes are tuned for driving on dry pavement.

The heavier the rain, the harder it is to see. Even if your windshield wiper blades are in good shape, a heavy rain can make it harder to see road signs and traffic signals, pavement markings, the edge of the road, and even people walking.

It is wise to keep your windshield wiping equipment in good shape and keep your windshield washer fluid reservoir filled with washer fluid. Replace your windshield wiper inserts when they show signs of streaking or missing areas on the windshield, or when strips of rubber start to separate from the inserts.

**⚠ CAUTION:**

**Wet brakes can cause accidents. They may not work as well in a quick stop and may cause pulling to one side. You could lose control of the vehicle.**

**After driving through a large puddle of water or a car wash, apply your brake pedal lightly until your brakes work normally.**

Driving too fast through large water puddles or even going through some car washes can cause problems, too. The water may affect your brakes. Try to avoid puddles. But if you cannot, try to slow down before you hit them.

## Hydroplaning

Hydroplaning is dangerous. So much water can build up under your tires that they can actually ride on the water. This can happen if the road is wet enough and you are going fast enough. When your vehicle is hydroplaning, it has little or no contact with the road.

Hydroplaning does not happen often. But it can if your tires do not have much tread or if the pressure in one or more is low. It can happen if a lot of water is standing on the road. If you can see reflections from trees, telephone poles, or other vehicles, and raindrops dimple the water's surface, there could be hydroplaning.

Hydroplaning usually happens at higher speeds. There just is not a hard and fast rule about hydroplaning. The best advice is to slow down when it is raining.

## Driving Through Deep Standing Water

***Notice:*** **If you drive too quickly through deep puddles or standing water, water can come in through your engine's air intake and badly damage your engine. Never drive through water that is slightly lower than the underbody of your vehicle. If you cannot avoid deep puddles or standing water, drive through them very slowly.**

## Driving Through Flowing Water

**⚠ CAUTION:**

**Flowing or rushing water creates strong forces. If you try to drive through flowing water, as you might at a low water crossing, your vehicle can be carried away. As little as six inches of flowing water can carry away a smaller vehicle. If this happens, you and other vehicle occupants could drown. Do not ignore police warning signs, and otherwise be very cautious about trying to drive through flowing water.**

## Some Other Rainy Weather Tips

- Besides slowing down, allow some extra following distance. And be especially careful when you pass another vehicle. Allow yourself more clear room ahead, and be prepared to have your view restricted by road spray.
- Have good tires with proper tread depth. See *Tires on page 319*.

## City Driving

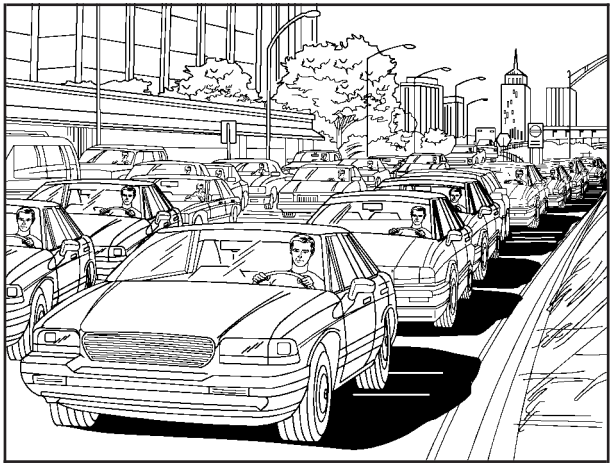

One of the biggest problems with city streets is the amount of traffic on them. You will want to watch out for what the other drivers are doing and pay attention to traffic signals.

Here are ways to increase your safety in city driving:

- Know the best way to get to where you are going. Get a city map and plan your trip into an unknown part of the city just as you would for a cross-country trip.
- Try to use the freeways that rim and crisscross most large cities. You will save time and energy. See *Freeway Driving on page 238*.
- Treat a green light as a warning signal. A traffic light is there because the corner is busy enough to need it. When a light turns green, and just before you start to move, check both ways for vehicles that have not cleared the intersection or may be running the red light.

## Freeway Driving

Mile for mile, freeways — also called thruways, parkways, expressways, turnpikes, or superhighways — are the safest of all roads. But they have their own special rules.

The most important advice on freeway driving is: Keep up with traffic and keep to the right. Drive at the same speed most of the other drivers are driving. Too-fast or too-slow driving breaks a smooth traffic flow. Treat the left lane on a freeway as a passing lane.

At the entrance, there is usually a ramp that leads to the freeway. If you have a clear view of the freeway as you drive along the entrance ramp, you should begin to check traffic. Try to determine where you expect to blend with the flow. Try to merge into the gap at close to the prevailing speed. Switch on your turn signal, check your mirrors, and glance over your shoulder as often as necessary. Try to blend smoothly with the traffic flow.

Once you are on the freeway, adjust your speed to the posted limit or to the prevailing rate if it is slower. Stay in the right lane unless you want to pass.

Before changing lanes, check your mirrors. Then use your turn signal.

Just before you leave the lane, glance quickly over your shoulder to make sure there is not another vehicle in your blind spot.

Once you are moving on the freeway, make certain you allow a reasonable following distance.

Expect to move slightly slower at night.

When you want to leave the freeway, move to the proper lane well in advance. If you miss your exit, do not, under any circumstances, stop and back up. Drive on to the next exit.

The exit ramp can be curved, sometimes quite sharply. The exit speed is usually posted. Reduce your speed according to your speedometer, not to your sense of motion. After driving for any distance at higher speeds, you may tend to think you are going slower than you actually are.

## Before Leaving on a Long Trip

Make sure you are ready. Try to be well rested. If you must start when you are not fresh — such as after a day's work — do not plan to make too many miles that first part of the journey. Wear comfortable clothing and shoes you can easily drive in.

Is your vehicle ready for a long trip? If you keep it serviced and maintained, it is ready to go. If it needs service, have it done before starting out.

Of course, you will find experienced and able service experts in GM dealerships all across North America. They will be ready and willing to help if you need it.

Here are some things you can check before a trip:

- *Windshield Washer Fluid:* Is the reservoir full? Are all windows clean inside and outside?
- *Wiper Blades:* Are they in good shape?
- *Fuel, Engine Oil, Other Fluids:* Have you checked all levels?
- *Lamps:* Are they all working? Are the lenses clean?
- *Tires:* They are vitally important to a safe, trouble-free trip. Is the tread good enough for long-distance driving? Are the tires all inflated to the recommended pressure?
- *Weather Forecasts:* What is the weather outlook along your route? Should you delay your trip a short time to avoid a major storm system?
- *Maps:* Do you have up-to-date maps?

## Highway Hypnosis

Is there actually such a condition as highway hypnosis? Or is it just plain falling asleep at the wheel? Call it highway hypnosis, lack of awareness, or whatever.

There is something about an easy stretch of road with the same scenery, along with the hum of the tires on the road, the drone of the engine, and the rush of the wind against the vehicle that can make you sleepy. Do not let it happen to you! If it does, your vehicle can leave the road in less than a second, and you could crash and be injured.

What can you do about highway hypnosis? First, be aware that it can happen.

Then here are some tips:

- Make sure your vehicle is well ventilated, with a comfortably cool interior.
- Keep your eyes moving. Scan the road ahead and to the sides. Check your rearview mirrors and your instruments frequently.
- If you get sleepy, pull off the road into a rest, service, or parking area and take a nap, get some exercise, or both. For safety, treat drowsiness on the highway as an emergency.

## Hill and Mountain Roads

Driving on steep hills or mountains is different from driving in flat or rolling terrain.

If you drive regularly in steep country, or if you are planning to visit there, here are some tips that can make your trips safer and more enjoyable.

- Keep your vehicle in good shape. Check all fluid levels and also the brakes, tires, cooling system, and transaxle. These parts can work hard on mountain roads.

**⚠ CAUTION:**

**If you do not shift down, your brakes could get so hot that they would not work well. You would then have poor braking or even none going down a hill. You could crash. Shift down to let your engine assist your brakes on a steep downhill slope.**

**⚠ CAUTION:**

**Coasting downhill in NEUTRAL (N) or with the ignition off is dangerous. Your brakes will have to do all the work of slowing down. They could get so hot that they would not work well. You would then have poor braking or even none going down a hill. You could crash. Always have your engine running and your vehicle in gear when you go downhill.**

- Know how to go down hills. The most important thing to know is this: let your engine do some of the slowing down. Shift to a lower gear when you go down a steep or long hill.
- Know how to go uphill. Drive in the highest gear possible.

- Stay in your own lane when driving on two-lane roads in hills or mountains. Do not swing wide or cut across the center of the road. Drive at speeds that let you stay in your own lane.
- As you go over the top of a hill, be alert. There could be something in your lane, like a stalled car or an accident.
- You may see highway signs on mountains that warn of special problems. Examples are long grades, passing or no-passing zones, a falling rocks area, or winding roads. Be alert to these and take appropriate action.

## Winter Driving

Here are some tips for winter driving:

- Have your vehicle in good shape for winter.
- You may want to put winter emergency supplies in your trunk.

Also see *Tires on page 319*.

Include an ice scraper, a small brush or broom, a supply of windshield washer fluid, a rag, some winter outer clothing, a small shovel, a flashlight, a red cloth, and a couple of reflective warning triangles. And, if you will be driving under severe conditions, include a small bag of sand, a piece of old carpet, or a couple of burlap bags to help provide traction. Be sure you properly secure these items in your vehicle.

## Driving on Snow or Ice

Most of the time, those places where the tires meet the road probably have good traction.

However, if there is snow or ice between the tires and the road, you can have a very slippery situation. You will have a lot less traction, or grip, and will need to be very careful.

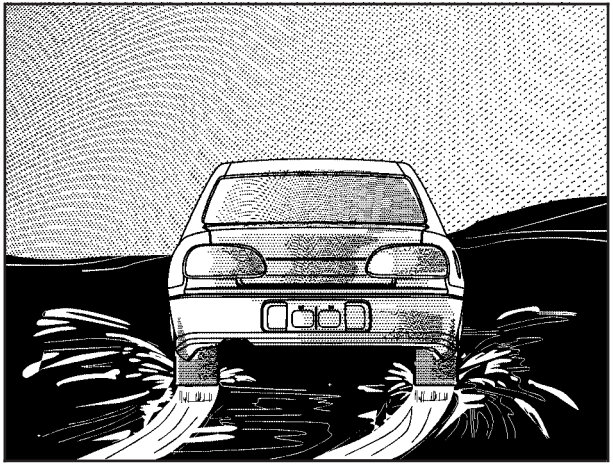

What is the worst time for this? Wet ice. Very cold snow or ice can be slick and hard to drive on.

But wet ice can be even more trouble because it may offer the least traction of all. You can get wet ice when it is about freezing, 32°F (0°C), and freezing rain begins to fall. Try to avoid driving on wet ice until salt and sand crews can get there.

Whatever the condition — smooth ice, packed, blowing, or loose snow — drive with caution.

Accelerate gently. Try not to break the fragile traction. If you accelerate too fast, the drive wheels will spin and polish the surface under the tires even more.

Unless you have the Anti-Lock Brake System (ABS), you will want to brake very gently, too. If you do have ABS, see *Anti-Lock Brake System (ABS) on page 225*. This system improves your vehicle's stability when you make a hard stop on a slippery road. Whether you have ABS or not, you will want to begin stopping sooner than you would on dry pavement. Without ABS, if you feel your vehicle begin to slide, let up on the brakes a little. Push the brake pedal down steadily to get the most traction you can.

Remember, unless you have ABS, if you brake so hard that your wheels stop rolling, you will just slide. Brake so your wheels always keep rolling and you can still steer.

- Whatever your braking system, allow greater following distance on any slippery road.
- Watch for slippery spots. The road might be fine until you hit a spot that is covered with ice. On an otherwise clear road, ice patches may appear in shaded areas where the sun cannot reach, such as around clumps of trees, behind buildings, or under bridges. Sometimes the surface of a curve or an overpass may remain icy when the surrounding roads are clear. If you see a patch of ice ahead of you, brake before you are on it. Try not to brake while you are actually on the ice, and avoid sudden steering maneuvers.

## If You Are Caught in a Blizzard

If you are stopped by heavy snow, you could be in a serious situation. You should probably stay with your vehicle unless you know for sure that you are near help and you can hike through the snow. Here are some things to do to summon help and keep yourself and your passengers safe:

- Turn on your hazard flashers.
- Tie a red cloth to your vehicle to alert police that you have been stopped by the snow.
- Put on extra clothing or wrap a blanket around you. If you do not have blankets or extra clothing, make body insulators from newspapers, burlap bags, rags, floor mats — anything you can wrap around yourself or tuck under your clothing to keep warm.

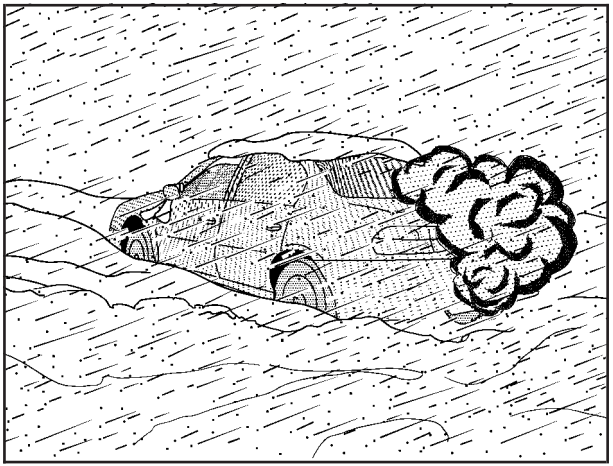

You can run the engine to keep warm, but be careful.

## ⚠ CAUTION:

**Snow can trap exhaust gases under your vehicle. This can cause deadly CO (carbon monoxide) gas to get inside. CO could overcome you and kill you. You cannot see it or smell it, so you might not know it is in your vehicle. Clear away snow from around the base of your vehicle, especially any that is blocking your exhaust pipe. And check around again from time to time to be sure snow does not collect there.**

**Open a window just a little on the side of the vehicle that is away from the wind. This will help keep CO out.**

Run your engine only as long as you must. This saves fuel. When you run the engine, make it go a little faster than just idle. That is, push the accelerator slightly. This uses less fuel for the heat that you get and it keeps the battery charged.

You will need a well-charged battery to restart the vehicle, and possibly for signaling later on with your headlamps. Let the heater run for a while.

Then, shut the engine off and close the window almost all the way to preserve the heat. Start the engine again and repeat this only when you feel really uncomfortable from the cold. But do it as little as possible. Preserve the fuel as long as you can. To help keep warm, you can get out of the vehicle and do some fairly vigorous exercises every half hour or so until help comes.

## If Your Vehicle is Stuck in Sand, Mud, Ice, or Snow

In order to free your vehicle when it is stuck, you will need to spin the wheels, but you do not want to spin your wheels too fast. The method known as rocking can help you get out when you are stuck, but you must use caution.

**⚠ CAUTION:**

**If you let your vehicle's tires spin at high speed, they can explode, and you or others could be injured. And, the transaxle or other parts of the vehicle can overheat. That could cause an engine compartment fire or other damage. When you are stuck, spin the wheels as little as possible. Do not spin the wheels above 35 mph (55 km/h) as shown on the speedometer.**

***Notice:*** **Spinning the wheels can destroy parts of your vehicle as well as the tires. If you spin the wheels too fast while shifting the transaxle back and forth, you can destroy the transaxle. See *Rocking Your Vehicle to Get It Out on page 248*.**

For information about using tire chains on your vehicle, see *Tire Chains on page 335*.

## Rocking Your Vehicle to Get It Out

First, turn the steering wheel left and right. That will clear the area around the front wheels. Then shift back and forth between REVERSE (R) and a forward gear, or with a manual transaxle, between FIRST (1) or SECOND (2) and REVERSE (R), spinning the wheels as little as possible. Release the accelerator pedal while you shift, and press lightly on the accelerator pedal when the transaxle is in gear. By slowly spinning the wheels in the forward and reverse directions, you will cause a rocking motion that may free your vehicle. If that does not get your vehicle out after a few tries, it may need to be towed out. If your vehicle does need to be towed out, see *Towing Your Vehicle on page 257*.

## Loading Your Vehicle

It is very important to know how much weight your vehicle can carry. This weight is called the vehicle capacity weight or maximum load amount and includes the weight of all occupants, cargo, and all nonfactory-installed options. Two labels on your vehicle show how much weight it may properly carry, the Tire and Loading Information label and the Certification label.

**⚠ CAUTION:**

**Do not load your vehicle any heavier than the Gross Vehicle Weight Rating (GVWR), or either the maximum front or rear Gross Axle Weight Rating (GAWR). If you do, parts on your vehicle can break, and it can change the way your vehicle handles. These could cause you to lose control and crash. Also, overloading can shorten the life of your vehicle.**

## Tire and Loading Information Label - United States

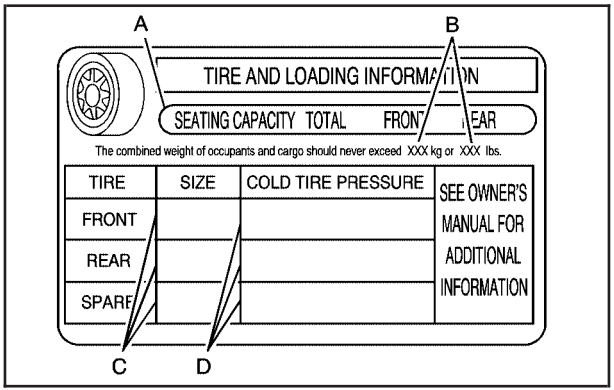


**Label Example**

A vehicle specific Tire and Loading Information label is attached to the vehicle's center pillar (B-pillar). With the driver's door open, you will find the label attached below the door lock post (striker). The tire and loading information label shows the number of occupant seating positions (A), and the maximum vehicle capacity weight (B) in kilograms and pounds.

The tire and loading information label also shows the tire size of the original equipment tires (C) and the recommended cold tire inflation pressures (D). For more information on tires and inflation see *Tires on page 319* and *Inflation - Tire Pressure on page 326*.

There is also important loading information on the Certification label. See "Certification Label" later in this section.

## Steps for Determining Correct Load Limit

1. Locate the statement The combined weight of occupants and cargo should never exceed XXX kg or XXX lbs“ on your vehicle’s placard.
2. Determine the combined weight of the driver and passengers that will be riding in your vehicle.
3. Subtract the combined weight of the driver and passengers from XXX kg or XXX lbs.
4. The resulting figure equals the available amount of cargo and luggage load capacity. For example, if the “XXX” amount equals 1400 lbs and there will be five 150 lb passengers in your vehicle, the amount of available cargo and luggage load capacity is 650 lbs (1400 - 750 (5 x 150) = 650 lbs).
5. Determine the combined weight of luggage and cargo being loaded on the vehicle. That weight may not safely exceed the available cargo and luggage load capacity calculated in Step 4.
6. If your vehicle will be towing a trailer, the load from your trailer will be transferred to your vehicle. Consult this manual to determine how this reduces the available cargo and luggage load capacity of your vehicle.

Your vehicle is neither designed nor intended to tow a trailer.

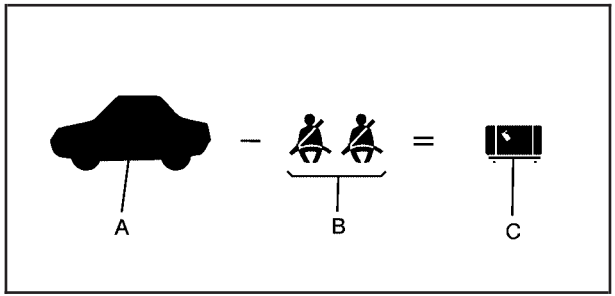


**Example 1**

| Item | Description | Total |
|---|---|---|
| A | Vehicle Capacity Weight for Example 1 = | 1,000 lbs (453 kg) |
| B | Subtract Occupant Weight 150 lbs (68 kg) × 2 = | 300 lbs (136 kg) |
| C | Available Occupant and Cargo Weight = | 700 lbs (317 kg) |

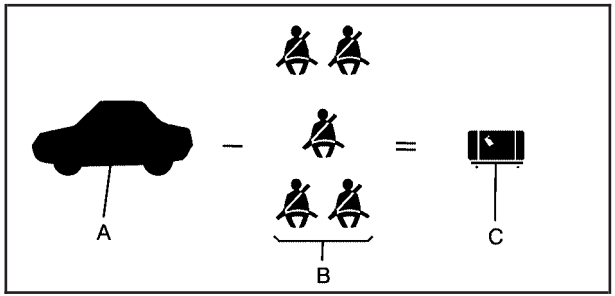


**Example 2**

| Item | Description | Total |
|---|---|---|
| A | Vehicle Capacity Weight for Example 2 = | 1,000 lbs (453 kg) |
| B | Subtract Occupant Weight 150 lbs (68 kg) × 5 = | 750 lbs (340 kg) |
| C | Available Cargo Weight = | 250 lbs (113 kg) |

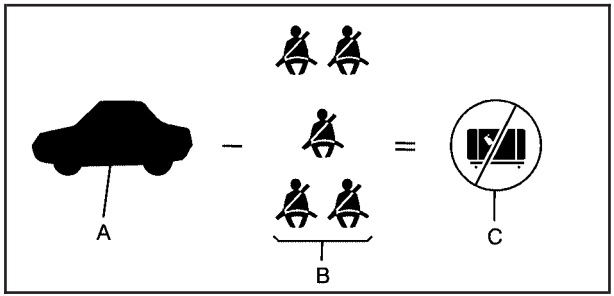


**Example 3**

| Item | Description | Total |
|---|---|---|
| A | Vehicle Capacity Weight for Example 3 = | 1,000 lbs (453 kg) |
| B | Subtract Occupant Weight 200 lbs (91 kg) × 5 = | 1,000 lbs (453 kg) |
| C | Available Cargo Weight = | 0 lbs (0 kg) |

Refer to your vehicle's tire and loading information label for specific information about your vehicle's capacity weight and seating positions. The combined weight of the driver, passenger, and cargo should never exceed your vehicle's capacity weight.

## Tire and Loading Information Label - Canada

RECOMMENDED TIRE SIZE AND INFLATION PRESSURE (COLD)
DIMENSIONS DES PNEUS et PRESSIONS DE CONFLAGE RECOMMANDÉES (ò froid)

| MAXIMUM LOAD CARGE MAXIMALE | OCCUPANTS OCCUPANTS | DISTRIBUTION RÉPARTITION FRONT AVANT | REAR ARRIÉRE | LUGGAGE BAGAGES |
|---|---|---|---|---|
| | | | | |

TOTAL LOAD = OCCUPANTS PLUS LUGGAGE CHARGE CLOBALE = OCCUPANTS PLUS BAGAGES

| TIRE SIZE DIMENSIONS DES PNEUS | PRESSURE PRESSION FRONT AVANT | REAR ARRIÉRE |
|---|---|---|
| | | |

SEE OWNER'S MANUAL FOR ADDITIONAL INFORMATION
VOIR MANUEL DE CONDUCTEUR POUR DES INFORMATIONS SUPPLÉMENTAIRES

**Label Example**

A vehicle specific tire and loading information label is attached to the driver's side, center pillar (B-pillar). This label shows the Maximum Load amount, the number of occupant seating positions, the original equipment tires, and the recommended cold tire inflation pressure.

For more information on tires and inflation see *Tires on page 319* and *Inflation - Tire Pressure on page 326*.

There is also important loading information on the Certification label. See “Certification Label” later in this section.

### Steps for Determining Correct Load Limit

1. Locate the “Maximum Load” amount.
2. Determine the combined weight of the driver and passengers that will be riding in your vehicle.
3. Subtract the combined weight of the driver and passengers from the Maximum Load amount.
4. The resulting figure equals the available amount of cargo and luggage load capacity. For example, if the Maximum Load amount equals 1400 lbs (635 kg) and there will be five 150 lb (68 kg) passengers in your vehicle, the amount of available cargo and luggage load capacity is 650 lbs (295 kg).
5. Determine the combined weight of luggage and cargo being loaded on the vehicle. That weight may not safely exceed the available cargo and luggage load capacity calculated in Step 4.
6. If your vehicle will be towing a trailer, the load from your trailer will be transferred to your vehicle. Consult this manual to determine how this reduces the available cargo and luggage load capacity of your vehicle.

Your vehicle is not designed nor intended to tow a trailer.

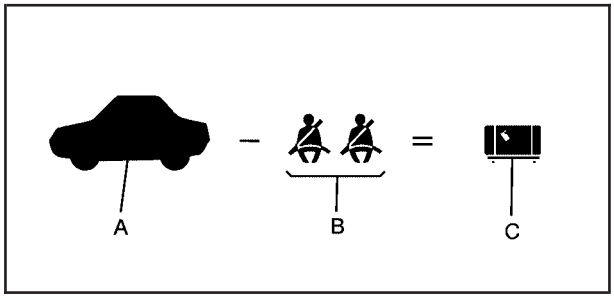


**Example 1**

| Item | Description | Total |
|---|---|---|
| A | Vehicle Capacity Weight or Maximum Load, for Example 1 = | 1,000 lbs (453 kg) |
| B | Subtract Occupant Weight 150 lbs (68 kg) × 2 = | 300 lbs (136 kg) |
| C | Available Occupant and Cargo Weight = | 700 lbs (317 kg) |

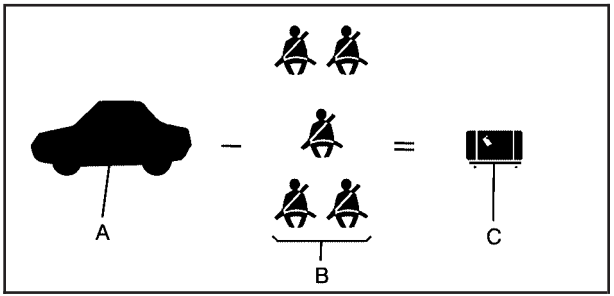


**Example 2**

| Item | Description | Total |
|---|---|---|
| A | Vehicle Capacity Weight or Maximum Load for Example 2 = | 1,000 lbs (453 kg) |
| B | Subtract Occupant Weight 150 lbs (68 kg) × 5 = | 750 lbs (340 kg) |
| C | Available Cargo Weight = | 250 lbs (113 kg) |

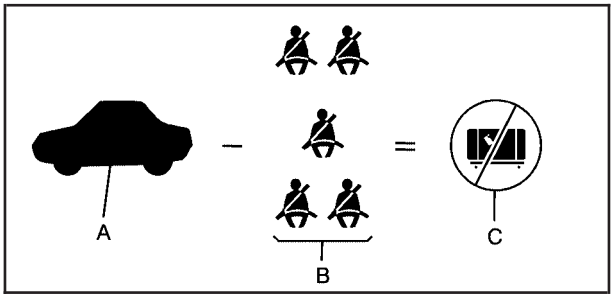


**Example 3**

| Item | Description | Total |
|---|---|---|
| A | Vehicle Capacity Weight or Maximum Load for Example 3 = | 1,000 lbs (453 kg) |
| B | Subtract Occupant Weight 200 lbs (91 kg) × 5 = | 1,000 lbs (453 kg) |
| C | Available Cargo Weight = | 0 lbs (0 kg) |

Refer to your vehicle's tire and loading information label for specific information about your vehicle's capacity weight and seating positions. The combined weight of the driver, passengers, and cargo should never exceed your vehicle's maximum load weight.

## Certification Label

MFD. BY GM DAEWOO Auto & Technology Company
REPUBLIC OF KOREA
DATE GVWR GAWR FRT GAWR RR

THIS VEHICLE CONFORMS TO ALL APPLICABLE FEDERAL MOTOR VEHICLE SAFETY, BUMPER, AND THEFT PREVENTION STANDARDS IN EFFECT ON THE DATE OF MANUFACTURE SHOWN ABOVE

**Label Example - United States**

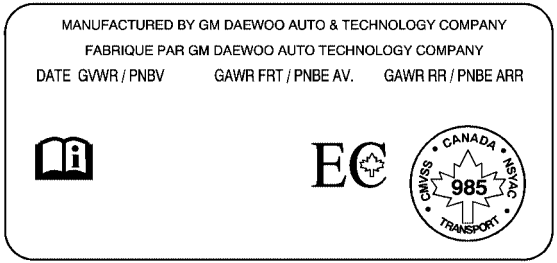


**Label Example - Canada**

A vehicle specific Certification label is attached to the center pillar (B-pillar), below the driver's door latch. This label tells you the gross weight capacity of your vehicle, called the Gross Vehicle Weight Rating (GVWR). The GVWR includes the weight of the vehicle, all occupants, fuel and cargo. Never exceed the GVWR for your vehicle, or the Gross Axle Weight Rating (GAWR) for either the front or rear axle.

And, if you do have a heavy load, you should spread it out. See "Steps for Determining Correct Load Limit" earlier in this section.

## ⚠ CAUTION:

**Do not load your vehicle any heavier than the Gross Vehicle Weight Rating (GVWR), or either the maximum front or rear Gross Axle Weight Rating (GAWR). If you do, parts on your vehicle can break, and it can change the way your vehicle handles. These could cause you to lose control and crash. Also, overloading can shorten the life of your vehicle.**

***Notice:*** **Overloading your vehicle may cause damage. Repairs would not be covered by your warranty. Do not overload your vehicle.**

If you put things inside your vehicle — like suitcases, tools, packages, or anything else — they will go as fast as the vehicle goes. If you have to stop or turn quickly, or if there is a crash, they will keep going.

**⚠ CAUTION:**

**Things you put inside your vehicle can strike and injure people in a sudden stop or turn, or in a crash.**

- **Put things in the cargo area of your vehicle. Try to spread the weight evenly.**
- **Never stack heavier things, like suitcases, inside the vehicle so that some of them are above the tops of the seats.**
- **Do not leave an unsecured child restraint in your vehicle.**
- **When you carry something inside the vehicle, secure it whenever you can.**
- **Do not leave a seat folded down unless you need to.**

# Towing

## Towing Your Vehicle

Consult your dealer or a professional towing service if you need to have your disabled vehicle towed. See *Roadside Assistance Program on page 408*.

If you want to tow your vehicle behind another vehicle for recreational purposes (such as behind a motorhome), see “Recreational Vehicle Towing” following.

## Recreational Vehicle Towing

Recreational vehicle towing means towing your vehicle behind another vehicle, such as behind a motorhome. The two most common types of recreational vehicle towing are known as “dinghy towing” (towing your vehicle with all four wheels on the ground) and “dolly towing” (towing your vehicle with two wheels on the ground and two wheels up on a device known as a “dolly”).

With the proper preparation and equipment, many vehicles can be towed in these ways. See “Dinghy Towing” and “Dolly Towing,” following.

Here are some important things to consider before you do recreational vehicle towing:

- What is the towing capacity of the towing vehicle? Be sure you read the tow vehicle manufacturer's recommendations.
- How far will you tow? Some vehicles have restrictions on how far and how long they can tow.
- Do you have the proper towing equipment? See your dealer or trailering professional for additional advice and equipment recommendations.
- Is your vehicle ready to be towed? Just as you would prepare your vehicle for a long trip, you will want to make sure your vehicle is prepared to be towed. See *Before Leaving on a Long Trip on page 239*.

## Dinghy Towing

***Notice:*** **If you tow your vehicle with all four wheels on the ground, the drivetrain components could be damaged. The repairs would not be covered by your warranty. Do not tow your vehicle with all four wheels on the ground.**

Your vehicle was not designed to be towed with all four wheels on the ground. If your vehicle must be towed, you should use a dolly. See "Dolly Towing" that follows for more information.

## Dolly Towing

***Notice:*** **Towing your vehicle from the rear with the front wheels on the ground could cause transaxle damage. Do not tow the vehicle from the rear with the front wheels on the road.**

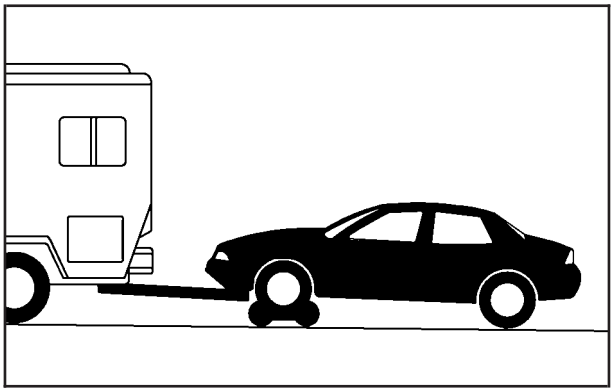

Your vehicle can be towed using a dolly. To tow your vehicle using a dolly, follow these steps:

1. Put the front wheels on a dolly.
2. Put an automatic transaxle in PARK (P) or a manual transaxle in NEUTRAL (N).
3. Set the parking brake and remove the key.
4. For an automatic transaxle, insert the key into the shift-lock release slot. See *Shifting Out of Park (P) on page 119*.
5. Shift to NEUTRAL (N).
6. Clamp the steering wheel in a straight-ahead position.
7. Release the parking brake.

## Towing a Trailer

Do not use your vehicle to tow a trailer. The vehicle is not designed or intended for such a use. Towing a trailer can adversely affect handling, durability and fuel economy.

# NOTES

# Section 5 Service and Appearance Care


**Service** ..... 264
Accessories and Modifications ..... 264
California Proposition 65 Warning ..... 265
Doing Your Own Service Work ..... 265
Adding Equipment to the Outside of Your Vehicle ..... 266

**Fuel** ..... 266
Gasoline Octane ..... 266
Gasoline Specifications ..... 266
California Fuel ..... 267
Additives ..... 267
Fuels in Foreign Countries ..... 268
Filling the Tank ..... 269
Filling a Portable Fuel Container ..... 272

**Checking Things Under the Hood** ..... 273
Hood Release ..... 274
Engine Compartment Overview ..... 276
Engine Oil ..... 277
Engine Air Cleaner/Filter ..... 281
Automatic Transaxle Fluid ..... 283
Manual Transaxle Fluid ..... 285
Hydraulic Clutch ..... 286
Engine Coolant ..... 287
Coolant Surge Tank Pressure Cap ..... 290
Engine Overheating ..... 290
Cooling System ..... 292
Power Steering Fluid ..... 297
Windshield Washer Fluid ..... 298
Brakes ..... 299
Battery ..... 303
Jump Starting ..... 304

**Headlamp Aiming** ..... 309

**Bulb Replacement** ..... 309
Halogen Bulbs ..... 309
Headlamps (Hatchback) ..... 310
Headlamps (Sedan) ..... 311
Front Turn Signal and Parking Lamps (Hatchback) ..... 312
Front Turn Signal and Parking Lamps (Sedan) ..... 313
Turn Signal Lamps (Side) ..... 314
Center High-Mounted Stoplamp (CHMSL) (Sedan) ..... 315
Taillamps, Turn Signal, Stoplamps and Back-up Lamps ..... 316
License Plate Lamp ..... 317
Replacement Bulbs ..... 317

# Section 5 Service and Appearance Care

**Windshield Wiper Blade Replacement** ..... 318
**Tires** ..... 319
Tire Sidewall Labeling ..... 320
Tire Terminology and Definitions ..... 323
Inflation - Tire Pressure ..... 326
Tire Inspection and Rotation ..... 327
When It Is Time for New Tires ..... 329
Buying New Tires ..... 330
Different Size Tires and Wheels ..... 331
Uniform Tire Quality Grading ..... 332
Wheel Alignment and Tire Balance ..... 333
Wheel Replacement ..... 333
Tire Chains ..... 335
If a Tire Goes Flat ..... 335
Changing a Flat Tire ..... 336
Removing the Spare Tire and Tools ..... 337
Removing the Flat Tire and Installing the Spare Tire ..... 339
Storing a Flat or Spare Tire and Tools ..... 344
Compact Spare Tire ..... 344
**Appearance Care** ..... 345
Cleaning the Inside of Your Vehicle ..... 345
Fabric/Carpet ..... 346
Leather ..... 347
Instrument Panel, Vinyl, and Other Plastic Surfaces ..... 348
Care of Safety Belts ..... 348
Weatherstrips ..... 348
Washing Your Vehicle ..... 349
Cleaning Exterior Lamps/Lenses ..... 349
Finish Care ..... 349
Windshield and Wiper Blades ..... 350
Aluminum Wheels ..... 350
Tires ..... 351
Sheet Metal Damage ..... 351
Finish Damage ..... 352
Underbody Maintenance ..... 352
Chemical Paint Spotting ..... 352
Vehicle Care/Appearance Materials ..... 353

# Section 5 Service and Appearance Care

**Vehicle Identification** ..... 354
Vehicle Identification Number (VIN) ..... 354
Service Parts Identification Label ..... 354
**Electrical System** ..... 355
Add-On Electrical Equipment ..... 355
Headlamp Wiring ..... 355
Windshield Wiper Fuses ..... 355
Power Windows and Other Power Options ... 356
Fuses and Circuit Breakers ..... 356
Instrument Panel Fuse Block ..... 357
Engine Compartment Fuse Block ..... 361
**Capacities and Specifications** ..... 368
**Normal Maintenance Replacement Parts** ..... 369
Engine Drive Belt Routing ..... 370

## Service

Your dealer knows your vehicle best and wants you to be happy with it. We hope you will go to your dealer for all your service needs. You will get genuine GM parts and GM-trained and supported service people.

We hope you will want to keep your GM vehicle all GM. Genuine GM parts have one of these marks:

## Accessories and Modifications

When you add non-GM accessories to your vehicle they can affect your vehicle's performance and safety, including such things as, airbags, braking, stability, ride and handling, emissions systems, aerodynamics, durability, and electronic systems like anti-lock brakes, traction control and stability control. Some of these accessories may even cause malfunction or damage not covered by warranty.

GM Accessories are designed to complement and function with other systems on your vehicle. Your GM dealer can accessorize your vehicle using genuine GM Accessories. When you go to your GM dealer and ask for GM Accessories, you will know that GM-trained and supported service technicians will perform the work using genuine GM Accessories.

## California Proposition 65 Warning

Most motor vehicles, including this one, contain and/or emit chemicals known to the State of California to cause cancer and birth defects or other reproductive harm. Engine exhaust, many parts and systems (including some inside the vehicle), many fluids, and some component wear by-products contain and/or emit these chemicals.

## Doing Your Own Service Work

**⚠ CAUTION:**

**You can be injured and your vehicle could be damaged if you try to do service work on a vehicle without knowing enough about it.**

- **Be sure you have sufficient knowledge, experience, the proper replacement parts, and tools before you attempt any vehicle maintenance task.**
- **Be sure to use the proper nuts, bolts, and other fasteners. English and metric fasteners can be easily confused. If you use the wrong fasteners, parts can later break or fall off. You could be hurt.**

If you want to do some of your own service work, you will want to use the proper service manual. It tells you much more about how to service your vehicle than this manual can. To order the proper service manual, see *Service Publications Ordering Information on page 421*.

Your vehicle has an airbag system. Before attempting to do your own service work, see *Servicing Your Airbag-Equipped Vehicle on page 82*.

You should keep a record with all parts receipts and list the mileage and the date of any service work you perform. See *Part E: Maintenance Record on page 398*.

## Adding Equipment to the Outside of Your Vehicle

Things you might add to the outside of your vehicle can affect the airflow around it. This may cause wind noise and affect windshield washer performance. Check with your dealer before adding equipment to the outside of your vehicle.

# Fuel

Use of the recommended fuel is an important part of the proper maintenance of your vehicle. To help keep your engine clean and maintain optimum vehicle performance, GM recommends the use of gasoline advertised as TOP TIER Detergent Gasoline.

## Gasoline Octane

Use regular unleaded gasoline with a posted octane rating of 87 or higher. If the octane rating is less than 87, you may notice an audible knocking noise when you drive, commonly referred to as spark knock. If this occurs, use a gasoline rated at 87 octane or higher as soon as possible. If you are using gasoline rated at 87 octane or higher and you hear heavy knocking, your engine needs service.

## Gasoline Specifications

At a minimum, gasoline should meet ASTM specification D 4814 in the United States or CAN/CGSB-3.5 in Canada. Some gasolines may contain an octane-enhancing additive called methylcyclopentadienyl manganese tricarbonyl (MMT). General Motors recommends against the use of gasolines containing MMT. See *Additives on page 267* for additional information.

## California Fuel

If your vehicle is certified to meet California Emissions Standards, it is designed to operate on fuels that meet California specifications. See the underhood emission control label. If this fuel is not available in states adopting California emissions standards, your vehicle will operate satisfactorily on fuels meeting federal specifications, but emission control system performance may be affected. The malfunction indicator lamp may turn on and your vehicle may fail a smog-check test. See *Malfunction Indicator Lamp on page 168* for sedans or *Malfunction Indicator Lamp on page 181* for hatchbacks. If this occurs, return to your authorized GM dealer for diagnosis. If it is determined that the condition is caused by the type of fuel used, repairs may not be covered by your warranty.

## Additives

To provide cleaner air, all gasolines in the United States are now required to contain additives that will help prevent engine and fuel system deposits from forming, allowing your emission control system to work properly. In most cases, you should not have to add anything to your fuel. However, some gasolines contain only the minimum amount of additive required to meet U.S. Environmental Protection Agency regulations.
To help keep fuel injectors and intake valves clean, or if your vehicle experiences problems due to dirty injectors or valves, look for gasoline that is advertised as TOP TIER Detergent Gasoline. Also, your GM dealer has additives that will help correct and prevent most deposit-related problems.

Gasolines containing oxygenates, such as ethers and ethanol, and reformulated gasolines may be available in your area. General Motors recommends that you use these gasolines if they comply with the specifications described earlier. However, E85 (85% ethanol) and other fuels containing more than 10% ethanol must not be used in vehicles that were not designed for those fuels.

***Notice:*** **Your vehicle was not designed for fuel that contains methanol. Do not use fuel containing methanol. It can corrode metal parts in your fuel system and also damage the plastic and rubber parts. That damage would not be covered under your warranty.**

Some gasolines that are not reformulated for low emissions may contain an octane-enhancing additive called methylcyclopentadienyl manganese tricarbonyl (MMT); ask the attendant where you buy gasoline whether the fuel contains MMT. General Motors recommends against the use of such gasolines. Fuels containing MMT can reduce the life of spark plugs and the performance of the emission control system may be affected. The malfunction indicator lamp may turn on. If this occurs, return to your authorized GM dealer for service.

## Fuels in Foreign Countries

If you plan on driving in another country outside the United States or Canada, the proper fuel may be hard to find. Never use leaded gasoline or any other fuel not recommended in the previous text on fuel. Costly repairs caused by use of improper fuel would not be covered by your warranty.

To check the fuel availability, ask an auto club, or contact a major oil company that does business in the country where you will be driving.

## Filling the Tank

**⚠ CAUTION:**

**Fuel vapor burns violently and a fuel fire can cause bad injuries. To help avoid injuries to you and others, read and follow all the instructions on the pump island. Turn off your engine when you are refueling. Do not smoke if you are near fuel or refueling your vehicle. Keep sparks, flames, and smoking materials away from fuel. Do not leave the fuel pump unattended when refueling your vehicle. This is against the law in some places. Keep children away from the fuel pump; never let children pump fuel.**

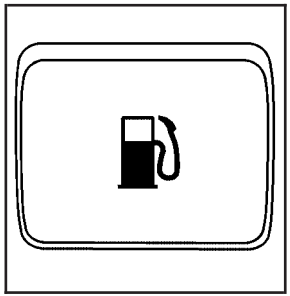

To open the fuel filler door, pull up on the release lever with this symbol on it. It is located on the floor on the outboard side of the driver's seat.

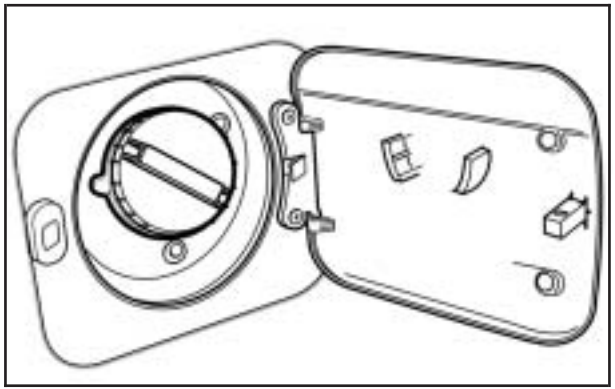

**Hatchback shown. Sedan similar**

The tethered fuel cap is located behind a hinged fuel door on the passenger's side of the vehicle.

To remove the fuel cap, turn it slowly counterclockwise. The fuel cap has a spring in it; if the cap is released too soon, it will spring back to the right.

## ⚠ CAUTION:

**If you spill fuel and then something ignites it, you could be badly burned. Fuel can spray out on you if you open the fuel cap too quickly. This spray can happen if your tank is nearly full, and is more likely in hot weather. Open the fuel cap slowly and wait for any hiss noise to stop. Then unscrew the cap all the way.**

Be careful not to spill fuel. Do not top off or overfill the tank and wait a few seconds after you have finished pumping before removing the nozzle. Clean fuel from painted surfaces as soon as possible. See *Washing Your Vehicle on page 349*.

When replacing the fuel cap, turn it clockwise until it clicks. Make sure the cap is fully installed. The diagnostic system can determine if the fuel cap has been left off or improperly installed. This would allow fuel to evaporate into the atmosphere. See *Malfunction Indicator Lamp on page 181*.

**⚠ CAUTION:**

**If a fire starts while you are refueling, do not remove the nozzle. Shut off the flow of fuel by shutting off the pump or by notifying the station attendant. Leave the area immediately.**

***Notice:*** **If you need a new fuel cap, be sure to get the right type. Your dealer can get one for you. If you get the wrong type, it may not fit properly. This may cause your malfunction indicator lamp to light and may damage your fuel tank and emissions system. See *Malfunction Indicator Lamp on page 181*.**

## Filling a Portable Fuel Container

**⚠ CAUTION:**

**Never fill a portable fuel container while it is in your vehicle. Static electricity discharge from the container can ignite the gasoline vapor. You can be badly burned and your vehicle damaged if this occurs.**
**To help avoid injury to you and others:**

- **Dispense gasoline only into approved containers.**
- **Do not fill a container while it is inside a vehicle, in a vehicle's trunk, pickup bed, or on any surface other than the ground.**

**CAUTION: (Continued)**

**CAUTION: (Continued)**

- **Bring the fill nozzle in contact with the inside of the fill opening before operating the nozzle. Contact should be maintained until the filling is complete.**
- **Do not smoke while pumping gasoline.**

## Checking Things Under the Hood

**⚠ CAUTION:**

**An electric fan under the hood can start up and injure you even when the engine is not running. Keep hands, clothing, and tools away from any underhood electric fan.**

**⚠ CAUTION:**

**Things that burn can get on hot engine parts and start a fire. These include liquids like fuel, oil, coolant, brake fluid, windshield washer and other fluids, and plastic or rubber. You or others could be burned. Be careful not to drop or spill things that will burn onto a hot engine.**

## Hood Release

To open the hood, do the following:

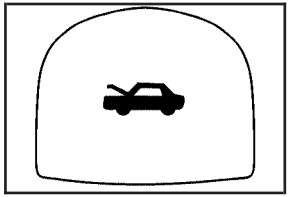

1. Pull the hood release handle inside the vehicle. It is located on the lower left side of the instrument panel.

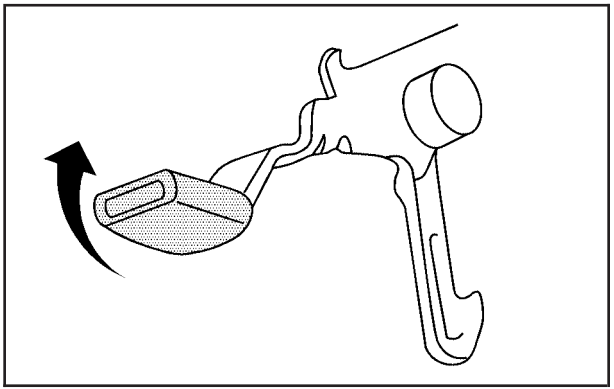

2. Then go to the front of the vehicle and lift up on the secondary hood release lever, located under the front center of the hood.
3. Lift the hood and release the hood prop from its retainer located on the underside of the hood.

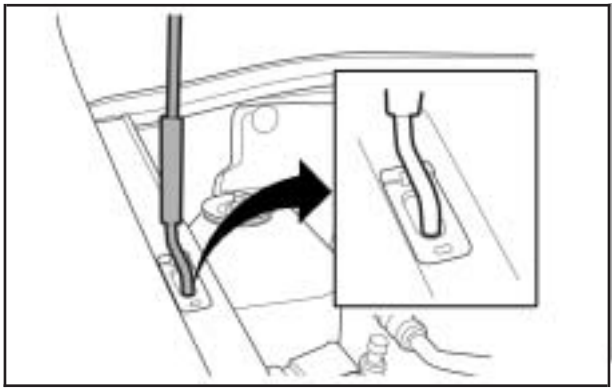

4. Securely place the hood prop into the slot on the inner fender.

Before closing the hood, be sure all the filler caps are on properly. Then lift the hood to relieve pressure on the hood prop. Remove the hood prop from the slot in the inner fender and return the prop to its retainer. Lower the hood 12 inches (30 cm) above the vehicle and release it so it fully latches. Check to make sure the hood is closed and repeat the process if necessary.

# Engine Compartment Overview

When you open the hood, here is what you will see:

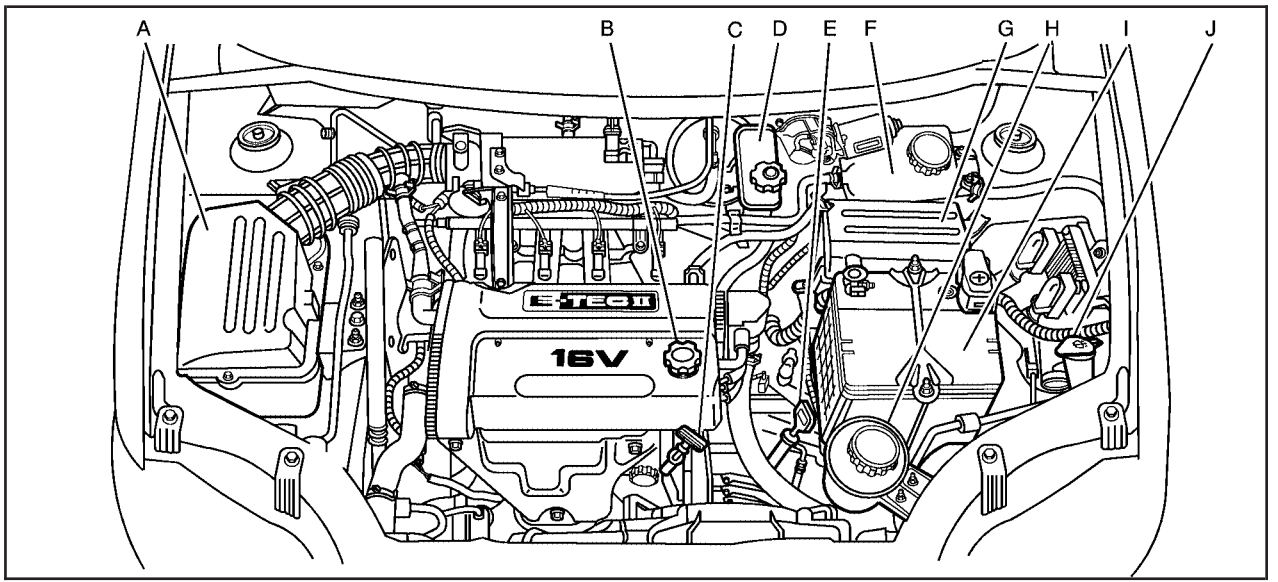


**Automatic shown, Manual similar**

A. Engine Air Cleaner/Filter. See *Engine Air Cleaner/Filter on page 281*.

B. Engine Oil Fill Cap. See “When to Add Engine Oil” under *Engine Oil on page 277*.

C. Engine Oil Dipstick. See “Checking Engine Oil” under *Engine Oil on page 277*.

D. Brake/Clutch Fluid Reservoir. See “Brake Fluid” under *Brakes on page 299* and *Hydraulic Clutch on page 286*.

E. Automatic Transaxle Dipstick. See *Automatic Transaxle Fluid on page 283*.

F. Engine Coolant Surge Tank. See *Cooling System on page 292*.

G. Engine Compartment Fuse Block. See *Engine Compartment Fuse Block on page 361*.

H. Power Steering Fluid Reservoir. See *Power Steering Fluid on page 297*.

I. Battery. See *Battery on page 303*.

J. Windshield Washer Fluid Reservoir. See “Adding Washer Fluid” under *Windshield Washer Fluid on page 298*.

## Engine Oil

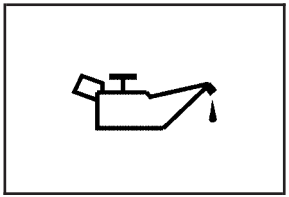

If the oil pressure light comes on, it means you need to check the engine oil level right away.

The oil pressure light is on the instrument panel cluster for sedans. See *Oil Pressure Light on page 185*. For hatchbacks, the oil pressure light is on the Secondary Information Center (SIC). See *Oil Pressure Light on page 185*. You should check the engine oil level regularly; this is an added reminder.

## Checking Engine Oil

It is a good idea to check the engine oil every time you get fuel. In order to get an accurate reading, the oil must be warm and the vehicle must be on level ground.

The engine oil dipstick handle is a yellow loop. See *Engine Compartment Overview on page 276* for the location of the engine oil dipstick.

1. Turn off the engine and give the oil several minutes to drain back into the oil pan. If you do not do this, the oil dipstick might not show the actual level.
2. Pull the dipstick and clean it with a paper towel or cloth, then push it back in all the way. Remove it again, keeping the tip down and check the level.

## When to Add Engine Oil

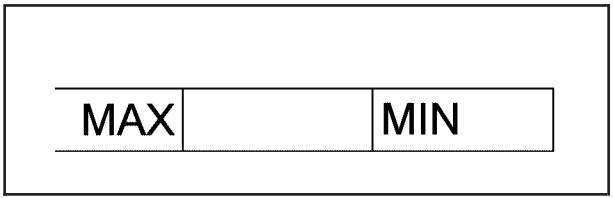


If the oil is below the lower hole at the tip of the dipstick (B), you will need to add at least one quart/liter of oil. But you must use the right kind. This section explains what kind of oil to use. For engine oil crankcase capacity, see *Capacities and Specifications on page 368*.

***Notice:*** **Do not add too much oil. If the engine has so much oil that the oil level gets above the upper hole (A) that shows the proper operating range, the engine could be damaged.**

See *Engine Compartment Overview on page 276* for the location of the engine oil fill cap.

Be sure to add enough oil to put the level somewhere in the proper operating range, between the holes on the dipstick. Push the dipstick all the way back in when you are through.

## What Kind of Engine Oil to Use

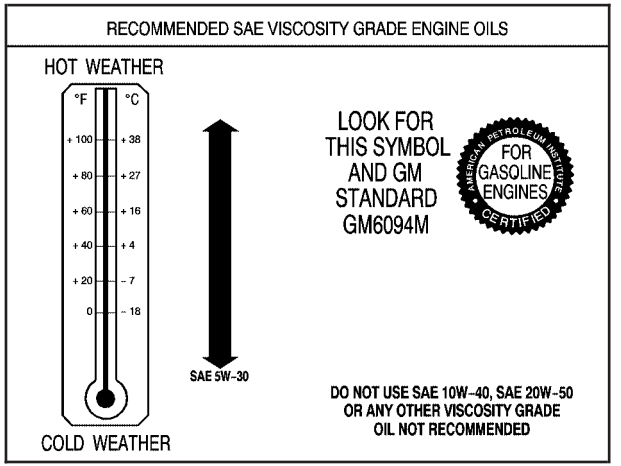


Look for two things:

- GM6094M

  Your vehicle's engine requires oil meeting GM Standard GM6094M. You should look for and use only an oil that meets GM Standard GM6094M.
- SAE 5W-30

  As shown in the viscosity chart, SAE 5W-30 is best for your vehicle.

  These numbers on an oil container show its viscosity, or thickness. Do not use other viscosity oils such as SAE 20W-50.

Oils meeting these requirements should also have the starburst symbol on the container. This symbol indicates that the oil has been certified by the American Petroleum Institute (API).

You should look for this information on the oil container, and use only those oils that are identified as meeting GM Standard GM6094M and have the starburst symbol on the front of the oil container.

***Notice:*** **Use only engine oil identified as meeting GM Standard GM6094M and showing the American Petroleum Institute Certified For Gasoline Engines starburst symbol. Failure to use the recommended oil can result in engine damage not covered by your warranty.**

GM Goodwrench® oil meets all the requirements for your vehicle.

If you are in an area of extreme cold, where the temperature falls below –20°F (–29°C), it is recommended that you use either an SAE 5W-30 synthetic oil or an SAE 0W-30 oil. Both will provide easier cold starting and better protection for the engine at extremely low temperatures.

## Engine Oil Additives

Do not add anything to the oil. The recommended oils with the starburst symbol that meet GM Standard GM6094M are all you will need for good performance and engine protection.

## When to Change Engine Oil

If any one of these is true for you, use the short trip/city maintenance schedule:

- Most trips are less than 5 miles (8 km). This is particularly important when outside temperatures are below freezing.
- Most trips include extensive idling, such as frequent driving in stop-and-go traffic.
- You frequently use a carrier on top of your vehicle.
- The vehicle is used for delivery service, police, taxi, or other commercial application.

Driving under these conditions causes engine oil to break down sooner. If any one of these is true for your vehicle, then you need to change the oil and filter every 3,000 miles (5 000 km) or 3 months, whichever occurs first.

If none of them is true, use the long trip/highway maintenance schedule. Change the oil and filter every 7,500 miles (12 500 km) or 12 months, whichever occurs first. Driving a vehicle with a fully warmed engine under highway conditions will cause engine oil to break down slower.

## What to Do with Used Oil

Used engine oil contains certain elements that may be unhealthy for your skin and could even cause cancer. Do not let used oil stay on your skin for very long. Clean your skin and nails with soap and water, or a good hand cleaner. Wash or properly dispose of clothing or rags containing used engine oil. See the manufacturer's warnings about the use and disposal of oil products.

Used oil can be a threat to the environment. If you change your own oil, be sure to drain all the oil from the filter before disposal. Never dispose of oil by putting it in the trash, pouring it on the ground, into sewers, or into streams or bodies of water. Instead, recycle it by taking it to a place that collects used oil. If you have a problem properly disposing of used oil, ask your dealer, a service station, or a local recycling center for help.

## Engine Air Cleaner/Filter

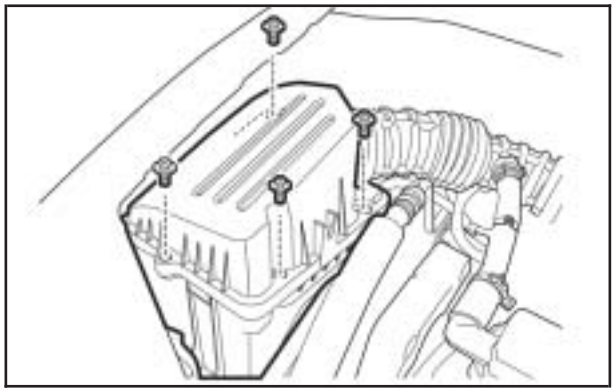

The engine air cleaner/filter is located in the engine compartment on the passenger's side of the vehicle. See *Engine Compartment Overview on page 276* for more information on location.

## When to Inspect the Engine Air Cleaner/Filter

Inspect the engine air cleaner/filter every 15,000 miles (25 000 km) and replace it every 30,000 miles (50 000 km). If you are driving in dusty/dirty conditions, inspect the filter at each engine oil change.

## How to Inspect the Engine Air Cleaner/Filter

To inspect the engine air cleaner/filter remove the filter from the vehicle and lightly shake the filter to release loose dust and dirt. If the filter remains caked with dirt, a new filter is required.

To inspect or replace the filter, do the following:

1. Remove the screws and lift off the cover.
2. Inspect or replace the engine air cleaner/filter.
3. Put the cover back on tightly and tighten the screws.

See *Part A: Scheduled Maintenance Services on page 374* for replacement intervals.

**⚠ CAUTION:**

**Operating the engine with the air cleaner/filter off can cause you or others to be burned. The air cleaner not only cleans the air; it helps to stop flames if the engine backfires. If it is not there and the engine backfires, you could be burned. Do not drive with it off, and be careful working on the engine with the air cleaner/filter off.**

***Notice:*** **If the air cleaner/filter is off, a backfire can cause a damaging engine fire. And, dirt can easily get into your engine, which will damage it. Always have the air cleaner/filter in place when you are driving.**

# Automatic Transaxle Fluid

## When to Check Automatic Transaxle Fluid

Check your automatic transaxle fluid level at least twice a year. Add fluid if needed. See *At Least Twice a Year on page 389*.

## How to Check Automatic Transaxle Fluid

Because this operation can be a little difficult, you may choose to have this done at the dealership service department.

If you do it yourself, be sure to follow all the instructions here, or you could get a false reading on the dipstick.

***Notice:*** **Too much or too little fluid can damage the transaxle. Too much can mean that some of the fluid could come out and fall on hot engine or exhaust system parts, starting a fire. Too little fluid could cause the transaxle to overheat. Be sure to get an accurate reading if you check the transaxle fluid.**

Wait at least 30 minutes before checking the transaxle fluid level if you have been driving:

- When outside temperatures are above 90°F (32°C).
- At high speed for quite a while.
- In heavy traffic — especially in hot weather.

To get the right reading, the fluid should be at normal operating temperature, which is 158°F to 176°F (70°C to 80°C).

Get the vehicle warmed up by driving about 15 miles (24 km) when outside temperatures are above 50°F (10°C). If it is colder than 50°F (10°C), you may have to drive longer.

## Checking the Fluid Level

Prepare your vehicle as follows:

1. Park your vehicle on a level place. Keep the engine running.
2. With the parking brake applied, place the shift lever in PARK (P).
3. With your foot on the brake pedal, move the shift lever through each gear range, pausing for about three seconds in each range. Then, position the shift lever in PARK (P).
4. Let the engine run at idle for three to five minutes.

Then, without shutting off the engine, follow these steps:

The automatic transaxle dipstick is located toward the front of the engine compartment, near the power steering fluid reservoir. See *Engine Compartment Overview on page 276* for more information on location.

1. Pull out the dipstick and wipe it with a clean rag or paper towel.
2. Push the dipstick back in all the way, wait three seconds and then pull it back out again.

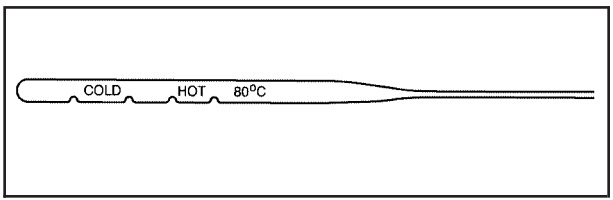


3. Check both sides of the dipstick, fluid should be between MIN and MAX mark of the hot area of the dipstick.
4. If the fluid level is in the acceptable range, push the dipstick back in all the way.

## How to Add Automatic Transaxle Fluid

Refer to the Maintenance Schedule to determine what kind of transaxle fluid to use. See *Part D: Recommended Fluids and Lubricants on page 396*.

If the fluid level is low, add only enough of the proper fluid to bring the level into the area between the two dimples in the hot range on the dipstick.

1. Pull out the dipstick.
2. Using a long-neck funnel, add enough fluid at the dipstick hole to bring it to the proper level.

   It does not take much fluid, generally less than one pint (0.5 L). Do not overfill.

***Notice:*** **Use of the incorrect automatic transaxle fluid may damage your vehicle, and the damages may not be covered by your warranty. Always use the automatic transaxle fluid listed in *Part D: Recommended Fluids and Lubricants on page 396*.**

3. After adding fluid, recheck the fluid level as described under “How to Check Automatic Transaxle Fluid,” earlier in this section.
4. When the correct fluid level is obtained, push the dipstick back in all the way.

## Manual Transaxle Fluid

It is not necessary to check the transaxle fluid level. A transaxle fluid leak is the only reason for fluid loss. If a leak occurs, take the vehicle to the dealership service department and have it repaired as soon as possible. See *Part D: Recommended Fluids and Lubricants on page 396* for the proper fluid to use.

## Hydraulic Clutch

There is one reservoir for both the brake and the hydraulic clutch fluid. See *Brakes on page 299* for more information.

The hydraulic clutch linkage in your vehicle is self-adjusting. The master cylinder reservoir is filled with hydraulic fluid.

A fluid loss in this system could indicate a problem. Have the system inspected and repaired.

## When to Check and What to Use

Refer to the Maintenance Schedule to determine how often you should check the fluid level in your master cylinder reservoir and for the proper fluid. See *Part B: Owner Checks and Services on page 389* and *Part D: Recommended Fluids and Lubricants on page 396*.

## How to Check and Add Fluid

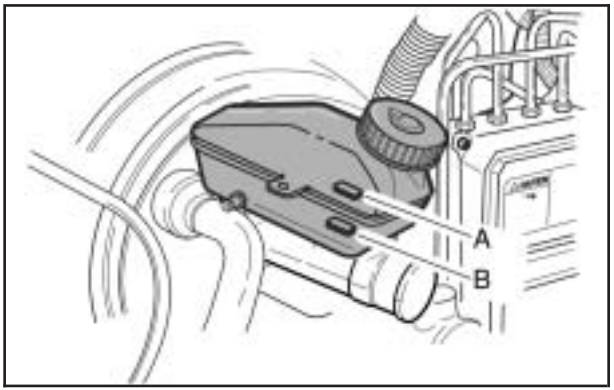


To check the fluid level, look on the side of the reservoir. If the fluid reaches the MAX (A) mark on the reservoir, the fluid level is correct. If the fluid does not reach the MIN (B) mark on the reservoir, then fluid needs to be added. The reservoir is located near the back of the engine compartment on the driver's side of the vehicle. See *Engine Compartment Overview on page 276* for more information on location.

## Engine Coolant

The cooling system in your vehicle is filled with DEX-COOL® engine coolant. This coolant is designed to remain in your vehicle for five years or 150,000 miles (240 000 km), whichever occurs first, if you add only DEX-COOL® extended life coolant.

The following explains your cooling system and how to add coolant when it is low. If you have a problem with engine overheating, see *Engine Overheating on page 290*.

A 50/50 mixture of clean, drinkable water and DEX-COOL® coolant will:

- Give freezing protection down to –34°F (–37°C).
- Give boiling protection up to 265°F (129°C).
- Protect against rust and corrosion.
- Help keep the proper engine temperature.
- Let the warning lights and gages work as they should.

***Notice:*** **Using coolant other than DEX-COOL® may cause premature engine, heater core, or radiator corrosion. In addition, the engine coolant may require changing sooner, at the first maintenance service after each 30,000 miles (50 000 km) or 24 months, whichever occurs first. Any repairs would not be covered by your warranty. Always use DEX-COOL® (silicate-free) coolant in your vehicle.**

## What to Use

Use a mixture of one-half clean, drinkable water and one-half DEX-COOL® coolant which will not damage aluminum parts. If you use this coolant mixture, you do not need to add anything else.

### ⚠ CAUTION:

**Adding only plain water to your cooling system can be dangerous. Plain water, or some other liquid such as alcohol, can boil before the proper coolant mixture will. Your vehicle's coolant warning system is set for the proper coolant mixture. With plain water or the wrong mixture, your engine could get too hot but you would not get the overheat warning. Your engine could catch fire and you or others could be burned. Use a 50/50 mixture of clean, drinkable water and DEX-COOL® coolant.**

***Notice:*** **If you use an improper coolant mixture, your engine could overheat and be badly damaged. The repair cost would not be covered by your warranty. Too much water in the mixture can freeze and crack the engine, radiator, heater core, and other parts.**

If you have to add coolant more than four times a year, have your dealer check your cooling system.

***Notice:*** **If you use extra inhibitors and/or additives in your vehicle's cooling system, you could damage your vehicle. Use only the proper mixture of the engine coolant listed in this manual for the cooling system. See** ***Part D: Recommended Fluids and Lubricants on page 396*** **for more information.**

## Checking Coolant

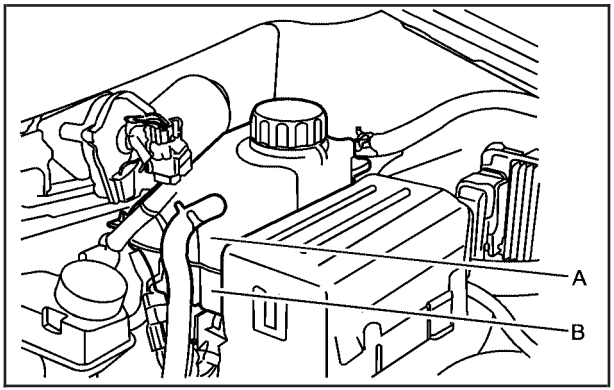


The engine coolant surge tank is located in the rear of the engine compartment on the driver's side of the vehicle. See *Engine Compartment Overview on page 276* for more information on location.

**⚠ CAUTION:**

**Turning the surge tank pressure cap when the engine and radiator are hot can allow steam and scalding liquids to blow out and burn you badly. Never turn the surge tank pressure cap — even a little — when the engine and radiator are hot.**

To check the engine coolant, the vehicle must be on a level surface. When your engine is cold, the coolant level should be between the Maximum (A) and Minimum (B) marks on the coolant surge tank. The level rises at engine operation temperature and drops again when the engine cools down.

### Adding Coolant

If you need more coolant, add the proper DEX-COOL® coolant mixture at the coolant surge tank, but only when the engine is cool. If the coolant surge tank is empty, a special fill procedure is necessary. See *Engine Overheating on page 290* for instructions on “How to Add Coolant to the Coolant Surge Tank.”

**⚠ CAUTION:**

**You can be burned if you spill coolant on hot engine parts. Coolant contains ethylene glycol, and it will burn if the engine parts are hot enough. Do not spill coolant on a hot engine.**

When replacing the pressure cap, make sure it is hand-tight and fully seated.

## Coolant Surge Tank Pressure Cap

***Notice:*** **If the pressure cap is not tightly installed, coolant loss and possible engine damage may occur. Be sure the cap is properly and tightly secured.**

## Engine Overheating

You will find a coolant temperature gage on your vehicle’s instrument panel cluster. See *Engine Coolant Temperature Gage on page 167*.

## If Steam Is Coming From Your Engine

**⚠ CAUTION:**

**Steam from an overheated engine can burn you badly, even if you just open the hood. Stay away from the engine if you see or hear steam coming from it. Just turn it off and get everyone away from the vehicle until it cools down. Wait until there is no sign of steam or coolant before you open the hood.**

**If you keep driving when your engine is overheated, the liquids in it can catch fire. You or others could be badly burned. Stop your engine if it overheats, and get out of the vehicle until the engine is cool.**

***Notice:*** **If your engine catches fire because you keep driving with no coolant, your vehicle can be badly damaged. The costly repairs would not be covered by your warranty.**

## If No Steam Is Coming From Your Engine

If you get an engine overheat warning, but see or hear no steam, the problem may not be too serious. Sometimes the engine can get a little too hot when you:

- Climb a long hill on a hot day.
- Stop after high-speed driving.
- Idle for long periods in traffic.

If you get the overheat warning with no sign of steam, try this for a minute or so:

1. In heavy traffic, let the engine idle in NEUTRAL (N) while stopped. If it is safe to do so, pull off the road, shift to PARK (P) or NEUTRAL (N) and let the engine idle.
2. Turn on your heater to full hot at the highest fan speed and open the windows as necessary.

If you no longer have the overheat warning, you can drive. Just to be safe, drive slower for about 10 minutes. If the warning does not come back on, you can drive normally.

If the warning continues and you have not stopped, pull over, stop, and park your vehicle right away.

If there is still no sign of steam, you can idle the engine for three minutes while you are parked. If you still have the warning, turn off the engine and get everyone out of the vehicle until it cools down.

You may decide not to lift the hood, but to get service help right away.

## Cooling System

When you decide it is safe to lift the hood, here is what you will see:

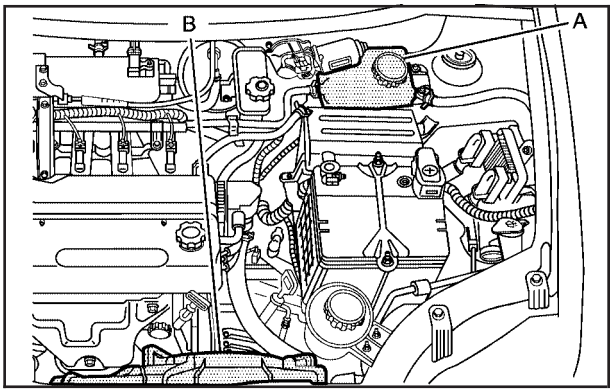


A. Coolant Surge Tank with Pressure Cap

B. Electric Engine Cooling Fan

**⚠ CAUTION:**

**An electric engine cooling fan under the hood can start up even when the engine is not running and can injure you. Keep hands, clothing, and tools away from any underhood electric fan.**

If the coolant inside the coolant surge tank is boiling, do not do anything else until it cools down. To check the engine coolant, the vehicle should be parked on a level surface. Make sure that the air conditioning is turned off.

The coolant level should be between the Minimum and Maximum marks on the coolant surge tank when the engine is cool. If it is not, you may have a leak at the pressure cap or in the radiator hoses, heater hoses, radiator, water pump, or somewhere else in the cooling system.

**⚠ CAUTION:**

**Heater and radiator hoses, and other engine parts, can be very hot. Do not touch them. If you do, you can be burned.**

**Do not run the engine if there is a leak. If you run the engine, it could lose all coolant. That could cause an engine fire, and you could be burned. Get any leak fixed before you drive the vehicle.**

If there seems to be no leak, with the engine on, check to see if the electric engine cooling fan is running. If the engine is overheating, the fan should be running. If it is not, your vehicle needs service.

***Notice:*** **Engine damage from running your engine without coolant is not covered by your warranty.**

## How to Add Coolant to the Coolant Surge Tank

***Notice:*** **This vehicle has a specific coolant fill procedure. Failure to follow this procedure could cause your engine to overheat and be severely damaged.**

If you have not found a problem yet, check to see if coolant is visible in the surge tank. If coolant is visible but the coolant level is not between the Minimum and Maximum marks, add a 50/50 mixture of clean, drinkable water and DEX-COOL® coolant at the coolant surge tank, but be sure the cooling system, including the coolant surge tank pressure cap, is cool before you do it. See *Engine Coolant on page 287* for more information.

If no coolant is visible in the surge tank, add coolant as follows:

### ⚠ CAUTION:

**Steam and scalding liquids from a hot cooling system can blow out and burn you badly. They are under pressure, and if you turn the coolant surge tank pressure cap — even a little — they can come out at high speed. Never turn the cap when the cooling system, including the coolant surge tank pressure cap, is hot. Wait for the cooling system and coolant surge tank pressure cap to cool if you ever have to turn the pressure cap.**

**⚠ CAUTION:**

**Adding only plain water to your cooling system can be dangerous. Plain water, or some other liquid such as alcohol, can boil before the proper coolant mixture will. Your vehicle's coolant warning system is set for the proper coolant mixture. With plain water or the wrong mixture, your engine could get too hot but you would not get the overheat warning. Your engine could catch fire and you or others could be burned. Use a 50/50 mixture of clean, drinkable water and a proper coolant.**

***Notice:*** **In cold weather, water can freeze and crack the engine, radiator, heater core and other parts. Use the recommended coolant and the proper coolant mixture.**

**⚠ CAUTION:**

**You can be burned if you spill coolant on hot engine parts. Coolant contains ethylene glycol and it will burn if the engine parts are hot enough. Do not spill coolant on a hot engine.**

1. You can remove the coolant surge tank pressure cap when the cooling system, including the coolant surge tank pressure cap and upper radiator hose, is no longer hot. Turn the pressure cap slowly counterclockwise about two or two and one-half turns.

   If you hear a hiss, wait for that to stop. This will allow any pressure still left to be vented out the discharge hose.

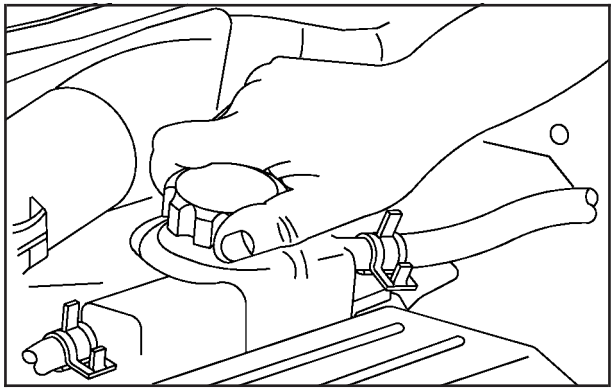

2. Then keep turning the pressure cap slowly, and remove it.

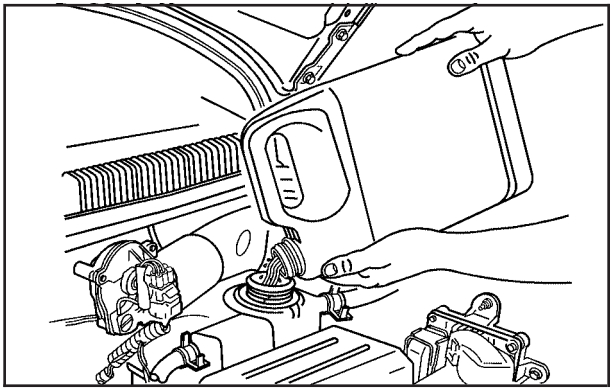

3. Fill the coolant surge tank with the proper mixture to the Maximum mark on the coolant surge tank. Wait about five minutes, then check to see if the level is below the mark. If the level is below the Maximum mark, add additional coolant to bring the level up to the mark. Repeat this procedure until the level remains constant at the Maximum mark for at least five minutes.

4. With the coolant surge tank pressure cap off, start the engine and let it run until you can feel the upper radiator hose getting hot. Watch out for the engine cooling fan.

   By this time, the coolant level inside the coolant surge tank may be lower. If the level is lower than the Maximum mark, add more of the proper mixture to the coolant surge tank until the level reaches the mark.

5. Then replace the pressure cap. Be sure the pressure cap is hand-tight and fully seated.

   See your dealer, if necessary.

# Power Steering Fluid

## When to Check Power Steering Fluid

The power steering fluid reservoir is located toward the front of the engine compartment on the driver's side of the vehicle. See *Engine Compartment Overview on page 276* for reservoir location.

It is not necessary to regularly check power steering fluid unless you suspect there is a leak in the system or you hear an unusual noise. A fluid loss in this system could indicate a problem. Have the system inspected and repaired.

## How to Check Power Steering Fluid

Turn the key off and let the engine compartment cool down.

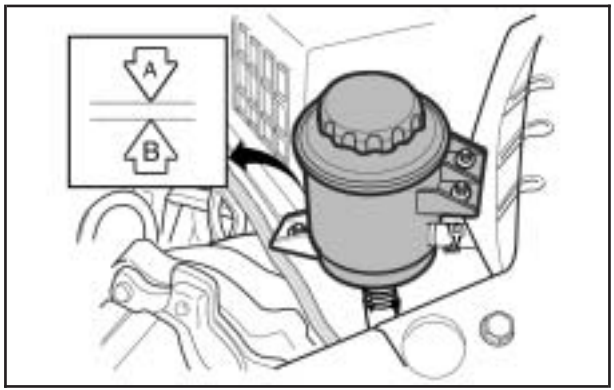


The level should be between the MIN (B) and MAX (A) marks on the reservoir. If the level drops below the MIN (B) mark, add power steering fluid. Do not overfill the reservoir and remember to replace the cap tightly when you are finished and clean up any spilled fluid.

## What to Use

To determine what kind of fluid to use, see *Part D: Recommended Fluids and Lubricants on page 396*. Always use the proper fluid. Failure to use the proper fluid can cause leaks and damage hoses and seals.

# Windshield Washer Fluid

## What to Use

When you need windshield washer fluid, be sure to read the manufacturer's instructions before use. If you will be operating your vehicle in an area where the temperature may fall below freezing, use a fluid that has sufficient protection against freezing.

## Adding Washer Fluid

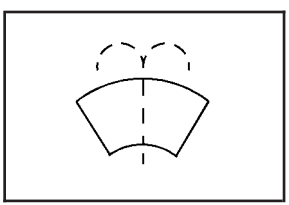

Open the cap with the washer symbol on it. Add washer fluid until the tank is full. See *Engine Compartment Overview on page 276* for reservoir location.

***Notice:***

- **When using concentrated washer fluid, follow the manufacturer's instructions for adding water.**
- **Do not mix water with ready-to-use washer fluid. Water can cause the solution to freeze and damage your washer fluid tank and other parts of the washer system. Also, water does not clean as well as washer fluid.**
- **Fill your washer fluid tank only three-quarters full when it is very cold. This allows for expansion if freezing occurs, which could damage the tank if it is completely full.**
- **Do not use engine coolant (antifreeze) in your windshield washer. It can damage your washer system and paint.**

# Brakes

## Brake Fluid

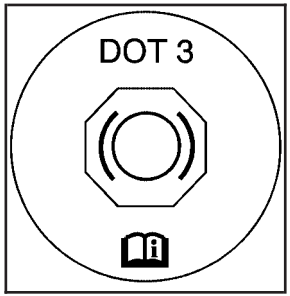


Your vehicle has one reservoir for both the brake and clutch hydraulic systems. It is filled with DOT-3 brake fluid. See *Engine Compartment Overview on page 276* for the location of the reservoir.

There are only two reasons why the brake fluid level in the reservoir might go down. The first is that the brake fluid goes down to an acceptable level during normal brake lining wear. When new linings are put in, the fluid level goes back up. The other reason is that fluid is leaking out of the brake or clutch system. If it is, you should have your brake/clutch system fixed, since a leak means that sooner or later your brakes will not work well, or will not work at all.

So, it is not a good idea to top off your brake fluid. Adding brake fluid will not correct a leak. If you add fluid when your linings are worn, then you will have too much fluid when you get new brake linings. You should add or remove brake fluid, as necessary, only when work is done on the brake hydraulic system.

**⚠ CAUTION:**

**If you have too much brake fluid, it can spill on the engine. The fluid will burn if the engine is hot enough. You or others could be burned, and your vehicle could be damaged. Add brake fluid only when work is done on the brake and/or clutch hydraulic system.**

When your brake fluid falls to a low level, your brake warning light will come on. See *Brake System Warning Light on page 164*.

### What to Add

When you do need brake fluid, use only DOT-3 brake fluid. Use new brake fluid from a sealed container only. See *Part D: Recommended Fluids and Lubricants on page 396*.

Always clean the brake fluid reservoir cap and the area around the cap before removing it. This will help keep dirt from entering the reservoir.

**⚠ CAUTION:**

**With the wrong kind of fluid in your brake system, your brakes may not work well, or they may not even work at all. This could cause a crash. Always use the proper brake fluid.**

***Notice:***

- **Using the wrong fluid can badly damage brake system parts. For example, just a few drops of mineral-based oil, such as engine oil, in your brake system can damage brake system parts so badly that they will have to be replaced. Do not let someone put in the wrong kind of fluid.**
- **If you spill brake fluid on your vehicle's painted surfaces, the paint finish can be damaged. Be careful not to spill brake fluid on your vehicle. If you do, wash it off immediately. See *Washing Your Vehicle on page 349*.**

## Brake Wear

Your vehicle has front disc brakes and may have rear drum brakes or rear disc brakes.

Disc brake pads have built-in wear indicators that make a high-pitched warning sound when the brake pads are worn and new pads are needed. The sound may come and go or be heard all the time your vehicle is moving, except when you are pushing on the brake pedal firmly.

### ⚠ CAUTION:

**The brake wear warning sound means that soon your brakes will not work well. That could lead to an accident. When you hear the brake wear warning sound, have your vehicle serviced.**

***Notice:*** **Continuing to drive with worn-out brake pads could result in costly brake repair.**

Some driving conditions or climates may cause a brake squeal when the brakes are first applied or lightly applied. This does not mean something is wrong with your brakes.

Properly torqued wheel nuts are necessary to help prevent brake pulsation. When tires are rotated, inspect brake pads for wear and evenly tighten wheel nuts in the proper sequence to GM torque specifications.

If you have rear drum brakes, they do not have wear indicators, but if you ever hear a rear brake rubbing noise, have the rear brake linings inspected immediately. Also, the rear brake drums should be removed and inspected each time the tires are removed for rotation or changing. When you have the front brake pads replaced, have the rear brakes inspected, too.

Brake linings should always be replaced as complete axle sets.

See *Brake System Inspection on page 395*.

## Brake Pedal Travel

See your dealer if the brake pedal does not return to normal height, or if there is a rapid increase in pedal travel. This could be a sign of brake trouble.

## Brake Adjustment

Every time you make a moderate brake stop, your disc brakes adjust for wear. If you rarely make a moderate or heavier stop, then your brakes might not adjust correctly. If you drive in that way, then — very carefully — make a few moderate brake stops about every 1,000 miles (1 600 km), so your brakes will adjust properly.

If your brake pedal goes down farther than normal, your rear drum brakes may need adjustment. Adjust them by backing up and firmly applying the brakes a few times.

## Replacing Brake System Parts

The braking system on a vehicle is complex. Its many parts have to be of top quality and work well together if the vehicle is to have really good braking. Your vehicle was designed and tested with top-quality GM brake parts. When you replace parts of your braking system — for example, when your brake linings wear down and you need new ones put in — be sure you get new approved GM replacement parts. If you do not, your brakes may no longer work properly. For example, if someone puts in brake linings that are wrong for your vehicle, the balance between your front and rear brakes can change — for the worse. The braking performance you have come to expect can change in many other ways if someone puts in the wrong replacement brake parts.

## Battery

Your vehicle has a maintenance free battery. When it is time for a new battery, get one that has the replacement number shown on the original battery's label. See *Engine Compartment Overview on page 276* for battery location.

***Warning:*** Battery posts, terminals, and related accessories contain lead and lead compounds, chemicals known to the State of California to cause cancer and reproductive harm. Wash hands after handling.

## Vehicle Storage

If you are not going to drive your vehicle for 25 days or more, remove the black, negative (–) cable from the battery. This will help keep your battery from running down.

**⚠ CAUTION:**

**Batteries have acid that can burn you and gas that can explode. You can be badly hurt if you are not careful. See *Jump Starting on page 304* for tips on working around a battery without getting hurt.**

## Jump Starting

If your battery has run down, you may want to use another vehicle and some jumper cables to start your vehicle. Be sure to use the following steps to do it safely.

**⚠ CAUTION:**

**Batteries can hurt you. They can be dangerous because:**

- **They contain acid that can burn you.**
- **They contain gas that can explode or ignite.**
- **They contain enough electricity to burn you.**

**If you do not follow these steps exactly, some or all of these things can hurt you.**

***Notice:*** **Ignoring these steps could result in costly damage to your vehicle that would not be covered by your warranty.**

**Trying to start your vehicle by pushing or pulling it will not work, and it could damage your vehicle.**

1. Check the other vehicle. It must have a 12-volt battery with a negative ground system.

***Notice:*** **If the other vehicle's system is not a 12-volt system with a negative ground, both vehicles can be damaged. Only use vehicles with 12-volt systems with negative grounds to jump start your vehicle.**

2. Get the vehicles close enough so the jumper cables can reach, but be sure the vehicles are not touching each other. If they are, it could cause a ground connection you do not want. You would not be able to start your vehicle, and the bad grounding could damage the electrical systems.

To avoid the possibility of the vehicles rolling, set the parking brake firmly on both vehicles involved in the jump start procedure. Put an automatic transaxle in PARK (P) or a manual transaxle in NEUTRAL before setting the parking brake.

***Notice:*** **If you leave your radio or other accessories on during the jump starting procedure, they could be damaged. The repairs would not be covered by your warranty. Always turn off your radio and other accessories when jump starting your vehicle.**

3. Turn off the ignition on both vehicles. Unplug unnecessary accessories plugged into the cigarette lighter or the accessory power outlet. Turn off the radio and all lamps that are not needed. This will avoid sparks and help save both batteries. And it could save the radio!

4. Open the hoods and locate the batteries. Find the positive (+) and negative (–) terminal locations on each vehicle. Your vehicle's positive (+) terminal is located under a red tethered cap on the battery. See *Engine Compartment Overview on page 276* for more information on location.

   Flip the cap up to access the positive (+) terminal.

## ⚠ CAUTION:

**An electric fan can start up even when the engine is not running and can injure you. Keep hands, clothing and tools away from any underhood electric fan.**

**⚠ CAUTION:**

**Using a match near a battery can cause battery gas to explode. People have been hurt doing this, and some have been blinded. Use a flashlight if you need more light.**

**Be sure the battery has enough water. You do not need to add water to the battery installed in your new vehicle. But if a battery has filler caps, be sure the right amount of fluid is there. If it is low, add water to take care of that first. If you don't, explosive gas could be present.**

**Battery fluid contains acid that can burn you. Do not get it on you. If you accidentally get it in your eyes or on your skin, flush the place with water and get medical help immediately.**

**⚠ CAUTION:**

**Fans or other moving engine parts can injure you badly. Keep your hands away from moving parts once the engine is running.**

5. Check that the jumper cables do not have loose or missing insulation. If they do, you could get a shock. The vehicles could be damaged too.

   Before you connect the cables, here are some things you should know. Positive (+) will go to positive (+) or to a remote positive (+) terminal if the vehicle has one. Negative (–) will go to a heavy, unpainted metal engine part or to a remote negative (–) terminal if the vehicle has one.

   Do not connect positive (+) to negative (–) or you will get a short that would damage the battery and maybe other parts too. And do not connect the negative (–) cable to the negative (–) terminal on the dead battery because this can cause sparks.

6. Connect the red positive (+) cable to the positive (+) terminal of the dead battery. Use a remote positive (+) terminal if the vehicle has one.
7. Do not let the other end touch metal. Connect it to the positive (+) terminal of the good battery. Use a remote positive (+) terminal if the vehicle has one.
8. Now connect the black negative (–) cable to the negative (–) terminal of the good battery. Use a remote negative (–) terminal if the vehicle has one.

   Do not let the other end touch anything until the next step. The other end of the negative (–) cable *does not* go to the dead battery. It goes to a heavy, unpainted metal engine part or to a remote negative (–) terminal on the vehicle with the dead battery.

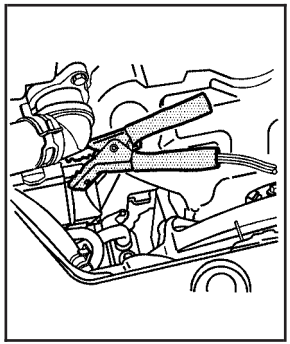

9. Connect the other end of the negative (–) cable at least 18 inches (45 cm) away from the dead battery, but not near engine parts that move.

The electrical connection is just as good there, and the chance of sparks getting back to the battery is much less.

10. Now start the vehicle with the good battery and run the engine for a while.
11. Try to start the vehicle that had the dead battery. If it will not start after a few tries, it probably needs service.

***Notice:*** **If the jumper cables are connected or removed in the wrong order, electrical shorting may occur and damage the vehicle. The repairs would not be covered by your warranty. Always connect and remove the jumper cables in the correct order, making sure that the cables do not touch each other or other metal.**

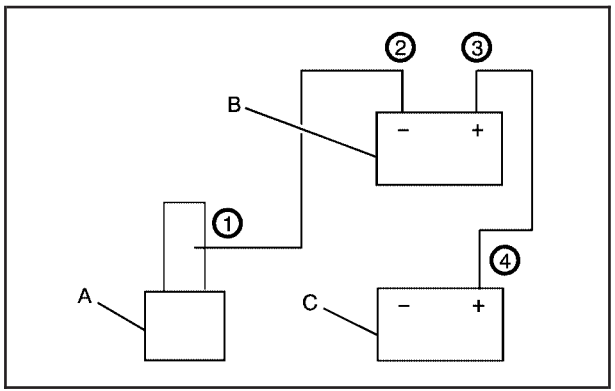


**Jumper Cable Removal**

A. Heavy, Unpainted Metal Engine Part or Remote Negative (–) Terminal
B. Good Battery or Remote Positive (+) and Remote Negative (–) Terminals
C. Dead Battery or Remote Positive (+) Terminal

To disconnect the jumper cables from both vehicles, do the following:

1. Disconnect the black negative (–) cable from the vehicle that had the dead battery.
2. Disconnect the black negative (–) cable from the vehicle with the good battery.
3. Disconnect the red positive (+) cable from the vehicle with the good battery.
4. Disconnect the red positive (+) cable from the other vehicle.
5. Return the positive (+) terminal cap to its original position.

## Headlamp Aiming

Headlamp aim has been preset at the factory and should need no further adjustment.

However, if your vehicle is damaged in an accident, the headlamp aim may be affected. Aim adjustment to the low-beam headlamps may be necessary if it is difficult to see the lane markers (for horizontal aim), or if oncoming drivers flash their high-beam headlamps at you (for vertical aim).

If you believe your headlamps need to be re-aimed, it is recommend that you take the vehicle to your dealer for service.

## Bulb Replacement

For the proper type of replacement bulbs, see *Replacement Bulbs on page 317*.

For any bulb changing procedure not listed in this section, contact your dealer.

### Halogen Bulbs

**⚠ CAUTION:**

**Halogen bulbs have pressurized gas inside and can burst if you drop or scratch the bulb. You or others could be injured. Be sure to read and follow the instructions on the bulb package.**

## Headlamps (Hatchback)

To replace a headlamp bulb, do the following:

1. Open the hood. See *Hood Release on page 274* for more information.
2. Remove the five screws from top of the radiator grille.
3. Remove the radiator grille.

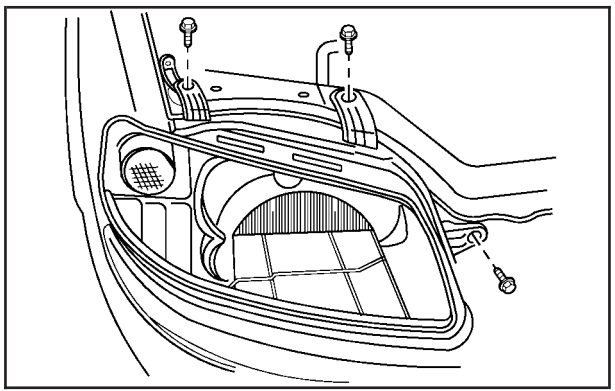

4. Remove the three bolts from the headlamp assembly.
5. Remove the headlamp assembly.
6. Disconnect the wiring harness connector from the rear of the bulb.

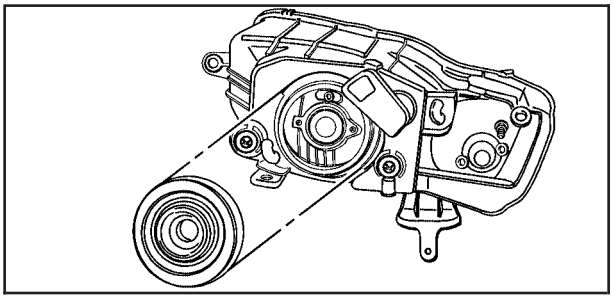

7. Remove the headlamp cap.

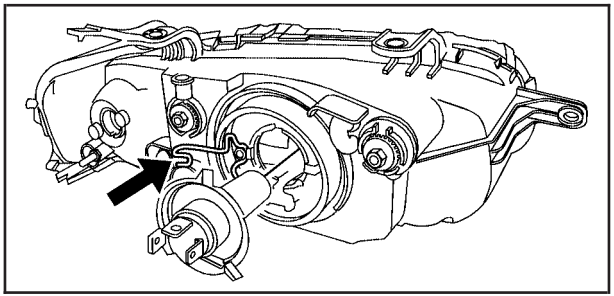

8. Release the spring that retains the bulb by loosing the screw.
9. Remove the old bulb.
10. Install the new bulb.
11. Install the bulb retaining spring.
12. Reverse Steps 1 through 8 to install the headlamp assembly.

## Headlamps (Sedan)

To replace a headlamp bulb, do the following:

1. Open the hood. See *Hood Release on page 274* for more information.

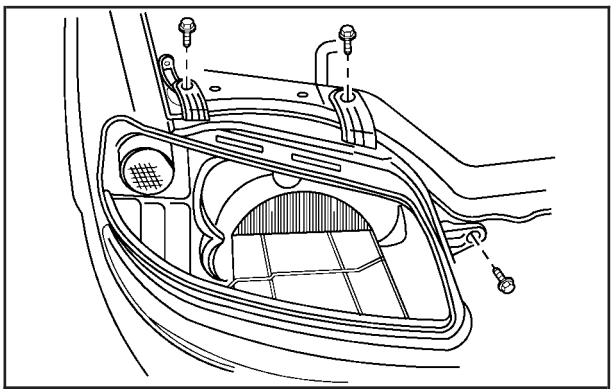

2. Remove the three bolts from the headlamp assembly.
3. Remove the headlamp assembly.
4. Disconnect the wiring harness connector from the rear of the bulb.
5. Remove the headlamp cap.

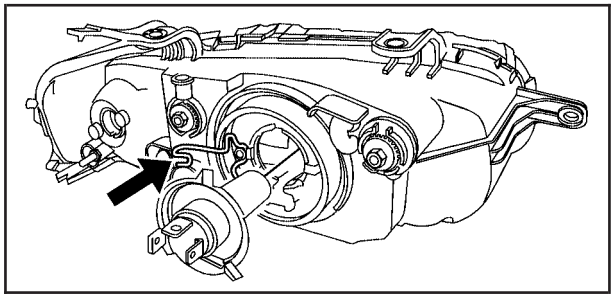

6. Release the spring that retains the bulb.
7. Remove the old bulb.
8. Install the new bulb.
9. Install the bulb retaining spring.
10. Reverse Steps 1 through 6 to install the headlamp assembly.

## Front Turn Signal and Parking Lamps (Hatchback)

To replace a front turn signal or parking lamp bulb, do the following:

1. Remove the radiator grille and the headlamp assembly. See Steps 2 through 5 under *Headlamps (Hatchback) on page 310* or *Headlamps (Sedan) on page 311* for instructions on how to remove the headlamp assembly.

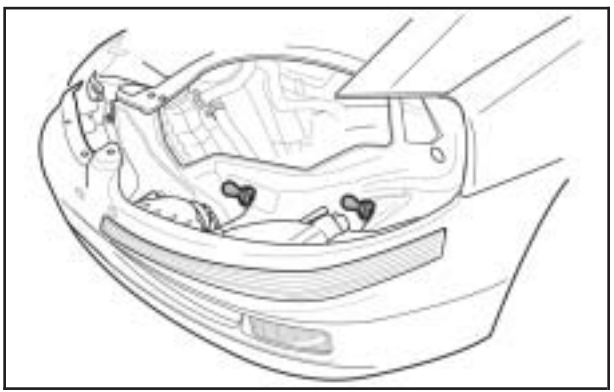

2. Turn the front turn signal bulb socket counterclockwise.

3. Pull the front turn signal bulb socket out of the lamp housing.
4. Press the bulb inward and turn it counterclockwise to remove it from the bulb socket.
5. Install the new bulb into the socket by pressing it in and turning it clockwise.
6. Install the socket into the lamp housing by turning it clockwise.
7. Reverse Steps 1 through 4 to install the assembly.

## Front Turn Signal and Parking Lamps (Sedan)

To replace a front turn signal or parking lamp bulb, do the following:

1. Open the hood. See *Hood Release on page 274* for more information.
2. Remove the headlamp assembly. See Steps 2 through 4 under *Headlamps (Hatchback) on page 310* or *Headlamps (Sedan) on page 311* for instructions on how to remove the headlamp assembly.

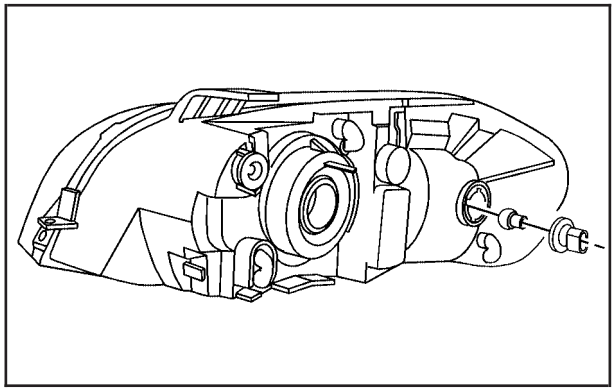

3. Turn the front turn signal bulb socket counterclockwise.
4. Pull the front turn signal bulb socket out of the lamp housing.
5. Press the bulb inward and turn it counterclockwise to remove it from the bulb socket.

6. Install the new bulb into the socket by pressing it in and turning it clockwise.
7. Install the socket into the lamp housing by turning it clockwise.
8. Reverse Steps 1 through 2 under *Headlamps (Hatchback) on page 310* or *Headlamps (Sedan) on page 311* to install the assembly.

## Turn Signal Lamps (Side)

To replace a side turn signal bulb, do the following:

1. Open the hood. See *Hood Release on page 274* for more information.
2. See Steps 2 through 5 under *Headlamps (Hatchback) on page 310* or *Headlamps (Sedan) on page 311* to access the side turn signal lamps.
3. Remove the side turn signal lamp assembly by pulling it forward.
4. Turn the bulb socket counterclockwise.

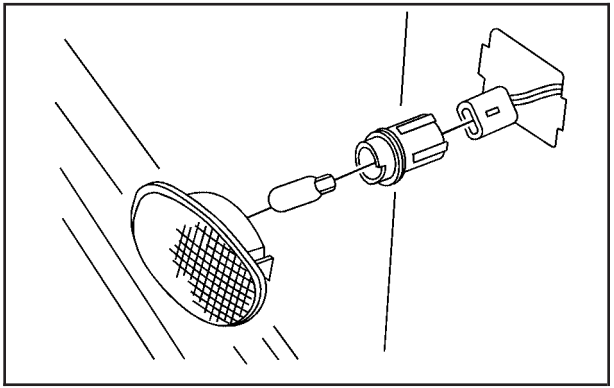

5. Remove the bulb from the lamp housing by pulling the bulb straight out of the socket.
6. Install the new bulb into the bulb socket by pushing it in and rotating the bulb socket clockwise.
7. Push the side turn signal lamp assembly back into its original position.

## Center High-Mounted Stoplamp (CHMSL) (Sedan)

To replace a CHMSL bulb on the hatchback, contact your dealer.

To replace a CHMSL bulb on the sedan do the following:

1. Open the trunk. See *Trunk on page 98* for more information.
2. Remove the two screws and the lamp housing. Disconnect the wiring harness connector before removing the lamp housing.

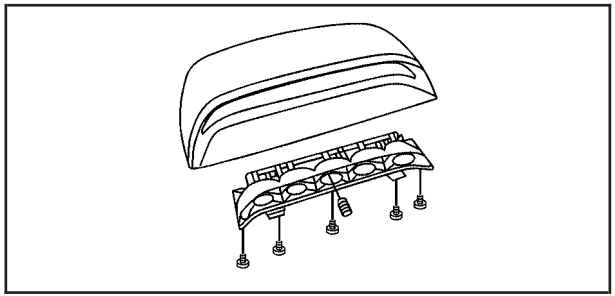

3. Remove the five screws and the reflector assembly.
4. Remove the bulb by pulling it straight out of the bulb holder.
5. Install the new bulb.
6. Reverse Steps 1 through 3 to reinstall.

## Taillamps, Turn Signal, Stoplamps and Back-up Lamps

To replace a taillamp, turn signal lamp, stoplamp, or back-up bulb, do the following:

1. Open the trunk or liftgate. See *Trunk on page 98* or *Liftgate (Hatchback) on page 100* for more information.

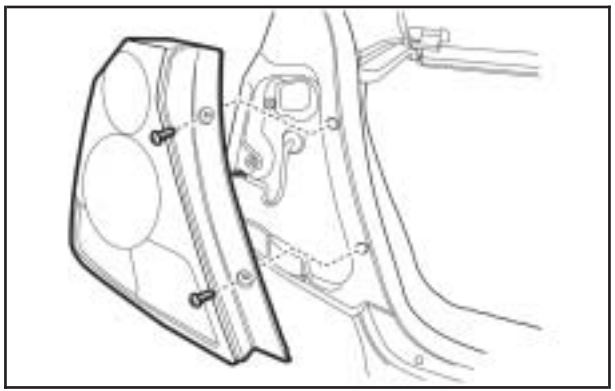

**Hatchback**

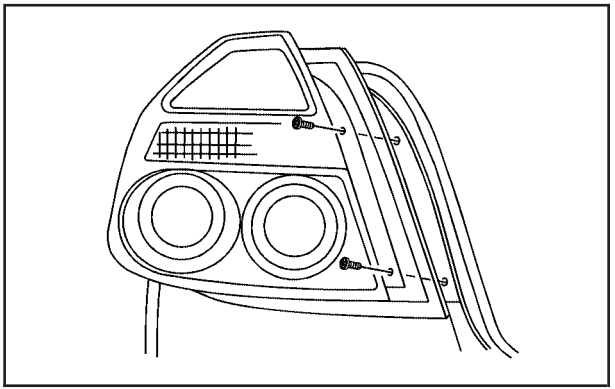

**Sedan**

2. Remove the two screws and the lamp assembly.
3. Remove the bulb socket by turning it counterclockwise.
4. Remove the bulb from the socket by pressing the bulb and turning it counterclockwise.
5. Install the appropriate bulb into the socket.
6. Replace the bulb socket into the lamp housing. Turn the bulb socket clockwise to secure.
7. Reverse Step 2 to reinstall the lamp housing.

## License Plate Lamp

To replace one of these bulbs, do the following:

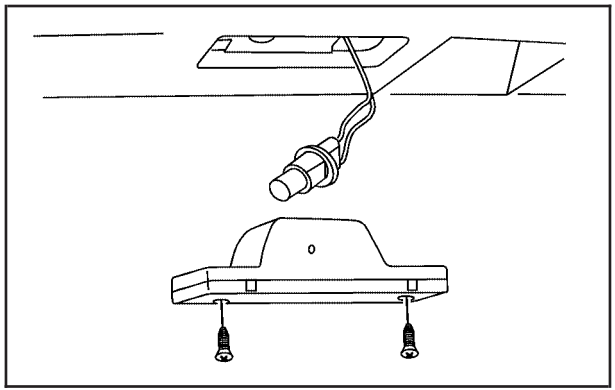

1. Remove the two screws holding each of the license plate lamps.
2. Turn and pull the license plate lamp forward through the opening.
3. Turn the bulb socket counterclockwise and pull the bulb straight out of the socket.
4. Install the new bulb.
5. Reverse Steps 1 through 3 to reinstall the license plate lamp.

## Replacement Bulbs

| Exterior Lamp | Bulb Number |
|---|---|
| Back-Up | 94535571 |
| Center High-Mounted Stoplamp (CHMSL) | 94535587 |
| Headlamps | 94535548 |
| Front Parking/Turn Signal (Hatchback) | 94535574 |
| Front Parking/Turn Signal (Sedan) | 94535574 |
| Side Turn Signal (Hatchback) | 94535587 |
| Side Turn Signal (Sedan) | 94535587 |
| Stoplamp/Taillamps | 94535574 |
| Turn Signal Lamps | 94535572 |

For replacement bulbs not listed here, contact your dealer.

# Windshield Wiper Blade Replacement

Windshield wiper blades should be inspected for wear or cracking. See “Wiper Blade Check” under *Part B: Owner Checks and Services on page 389* for more information.

Replacement blades come in different types and are removed in different ways.

Here is how to remove the Shepherd’s Hook type:

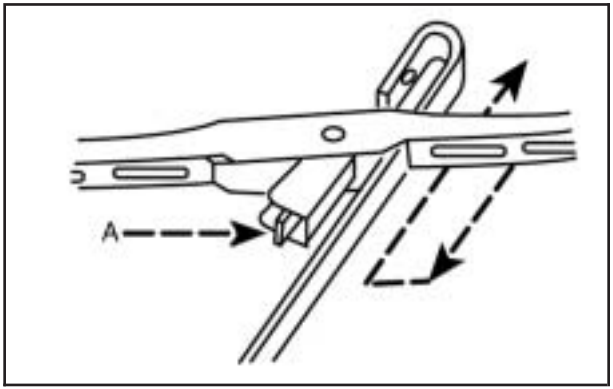


1. Pull the windshield wiper arm away from the windshield.
2. Press the retaining clip (A) and pull the wiper blade off the arm.
3. Install a new blade by reversing Steps 1 and 2.

# Tires

Your new vehicle comes with high-quality tires made by a leading tire manufacturer. If you ever have questions about your tire warranty and where to obtain service, see your GM Warranty booklet for details. For additional information refer to the tire manufacturer's booklet included with your vehicle.

**⚠ CAUTION:**

**Poorly maintained and improperly used tires are dangerous.**

- **Overloading your vehicle's tires can cause overheating as a result of too much friction. You could have an air-out and a serious accident. See *Loading Your Vehicle on page 248*.**

**CAUTION: (Continued)**

**CAUTION: (Continued)**

- **Underinflated tires pose the same danger as overloaded tires. The resulting accident could cause serious injury. Check all tires frequently to maintain the recommended pressure. Tire pressure should be checked when your vehicle's tires are cold. See *Inflation - Tire Pressure on page 326*.**
- **Overinflated tires are more likely to be cut, punctured, or broken by a sudden impact — such as when you hit a pothole. Keep tires at the recommended pressure.**
- **Worn, old tires can cause accidents. If the tire's tread is badly worn, or if your vehicle's tires have been damaged, replace them.**

## Tire Sidewall Labeling

Useful information about a tire is molded into its sidewall. The examples below show a typical passenger car tire and a compact spare tire sidewall.

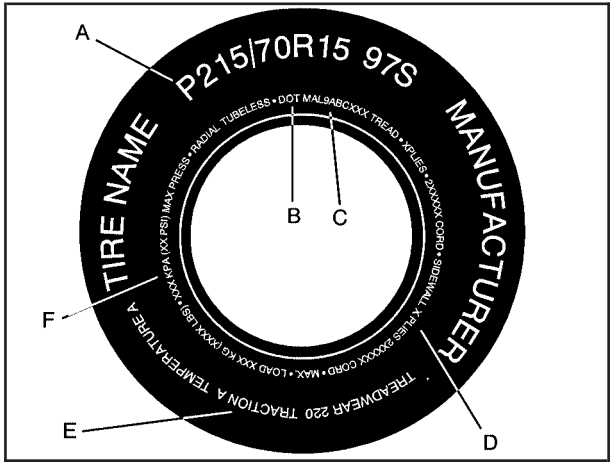


**Passenger Car Tire Example**

**(A) Tire Size:** The tire size is a combination of letters and numbers used to define a particular tire's width, height, aspect ratio, construction type and service description. See the "Tire Size" illustration later in this section for more detail.

**(B) DOT (Department of Transportation):** The Department of Transportation (DOT) code indicates that the tire is in compliance with the U.S. Department of Transportation Motor Vehicle Safety Standards.

**(C) Tire Identification Number (TIN):** The letters and numbers following DOT code are the Tire Identification Number (TIN). The TIN shows the manufacturer and plant code, tire size, and date the tire was manufactured. The TIN is molded onto both sides of the tire, although only one side may have the date of manufacture.

**(D) Tire Ply Material:** The type of cord and number of plies in the sidewall and under the tread.

**(E) Uniform Tire Quality Grading (UTQG):** Tire manufacturers are required to grade tires based on three performance factors: treadwear, traction and temperature resistance. For more information see *Uniform Tire Quality Grading on page 332*.

**(F) Maximum Cold Inflation Load Limit:** Maximum load that can be carried and the maximum pressure needed to support that load. For information on recommended tire pressure see *Inflation - Tire Pressure on page 326* and *Loading Your Vehicle on page 248*.

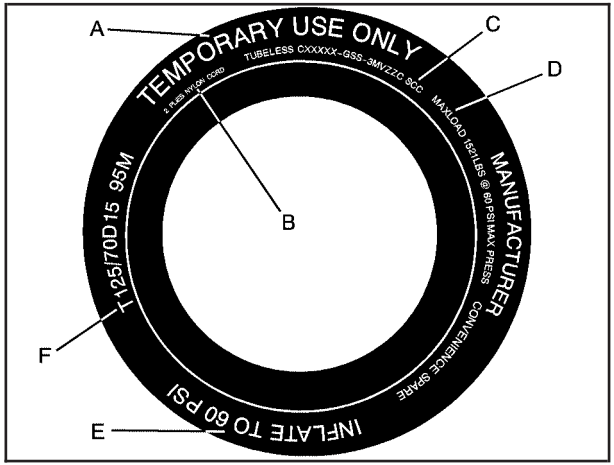


**Compact Spare Tire Example**

**(A) Temporary Use Only:** The compact spare tire or temporary use tire has a tread life of approximately 3,000 miles (5 000 km) and should not be driven at speeds over 65 mph (105 km/h). The compact spare tire is for emergency use when a regular road tire has lost air and gone flat. See *Compact Spare Tire on page 344* and *If a Tire Goes Flat on page 335*.

**(B) Tire Ply Material:** The type of cord and number of plies in the sidewall and under the tread.

**(C) Tire Identification Number (TIN):** The Tire Identification Number (TIN). The TIN shows the manufacturer and plant code, tire size, and date the tire was manufactured. The TIN is molded onto both sides of the tire, although only one side may have the date of manufacture.

**(D) Maximum Cold Inflation Load Limit:** Maximum load that can be carried and the maximum pressure needed to support that load. See *Compact Spare Tire on page 344* and *Loading Your Vehicle on page 248*.

**(E) Tire Inflation:** The temporary use tire or compact spare tire should be inflated to 60 psi (420 kPa). For more information on tire pressure and inflation see *Inflation - Tire Pressure on page 326*.

**(F) Tire Size:** A combination of letters and numbers define a tire's width, height, aspect ratio, construction type and service description. The letter T as the first character in the tire size means the tire is for temporary use only.

## Tire Size

The following illustration shows an example of a typical passenger car tire size.

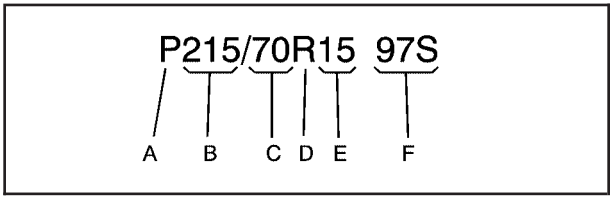


**(A) Passenger (P-Metric) Tire:** The United States version of a metric tire sizing system. The letter P as the first character in the tire size means a passenger vehicle tire engineered to standards set by the U. S. Tire and Rim Association.

**(B) Tire Width:** The three-digit number indicates the tire section width in millimeters from sidewall to sidewall.

**(C) Aspect Ratio:** A two-digit number that indicates the tire height-to-width measurements. For example, if the tire size aspect ratio is 70, as shown in item C of the illustration, it would mean that the tire's sidewall is 70% as high as it is wide.

**(D) Construction Code:** A letter code is used to indicate the type of ply construction in the tire. The letter R means radial ply construction; the letter D means diagonal or bias ply construction; and the letter B means belted-bias ply construction.

**(E) Rim Diameter:** Diameter of the wheel in inches.

**(F) Service Description:** These characters represent the load range and the speed rating of a tire. The load range represents the load carry capacity a tire is certified to carry. The speed rating is the maximum speed a tire is certified to carry a load. Speed ratings range from A to Z.

## Tire Terminology and Definitions

**Air Pressure:** The amount of air inside the tire pressing outward on each square inch of the tire. Air pressure is expressed in pounds per square inch (psi) or kilopascal (kPa).

**Accessory Weight:** This means the combined weight of optional accessories. Some examples of optional accessories are, automatic transmission/transaxle, power steering, power brakes, power windows, power seats, and air conditioning.

**Aspect Ratio:** The relationship of a tire's height to its width.

**Belt:** A rubber coated layer of cords that is located between the plies and the tread. Cords may be made from steel or other reinforcing materials.

**Bead:** The tire bead contains steel wires wrapped by steel cords that hold the tire onto the rim.

**Bias Ply Tire:** A pneumatic tire in which the plies are laid at alternate angles less than 90 degrees to the centerline of the tread.

**Cold Tire Pressure:** The amount of air pressure in a tire, measured in pounds per square inch (psi) or kilopascals (kPa) before a tire has built up heat from driving. See *Inflation - Tire Pressure on page 326*.

**Curb Weight:** This means the weight of a motor vehicle with standard and optional equipment including the maximum capacity of fuel, oil, and coolant, but without passengers and cargo.

**DOT Markings:** A code molded into the sidewall of a tire signifying that the tire is in compliance with the U.S. Department of Transportation (DOT) motor vehicle safety standards. The DOT code includes the Tire Identification Number (TIN), an alphanumeric designator which can also identify the tire manufacturer, production plant, brand, and date of production.

**GVWR:** Gross Vehicle Weight Rating. See *Loading Your Vehicle on page 248*.

**GAWR FRT:** Gross Axle Weight Rating for the front axle. See *Loading Your Vehicle on page 248*.

**GAWR RR:** Gross Axle Weight Rating for the rear axle. See *Loading Your Vehicle on page 248*.

**Intended Outboard Sidewall:** The side of an asymmetrical tire, that must always face outward when mounted on a vehicle.

**Kilopascal (kPa):** The metric unit for air pressure.

**Light Truck (LT-Metric) Tire:** A tire used on light duty trucks and some multipurpose passenger vehicles.

**Load Index:** An assigned number ranging from 1 to 279 that corresponds to the load carrying capacity of a tire.

**Maximum Inflation Pressure:** The maximum air pressure to which a cold tire may be inflated. The maximum air pressure is molded onto the sidewall.

**Maximum Load Rating:** The load rating for a tire at the maximum permissible inflation pressure for that tire.

**Maximum Loaded Vehicle Weight:** The sum of curb weight, accessory weight, vehicle capacity weight, and production options weight.

**Normal Occupant Weight:** The number of occupants a vehicle is designed to seat multiplied by 150 lbs (68 kg). See *Loading Your Vehicle on page 248*.

**Occupant Distribution:** Designated seating positions.

**Outward Facing Sidewall:** The side of an asymmetrical tire that has a particular side that faces outward when mounted on a vehicle. The side of the tire that contains a whitewall, bears white lettering, or bears manufacturer, brand, and/or model name molding that is higher or deeper than the same moldings on the other sidewall of the tire.

**Passenger (P-Metric) Tire:** A tire used on passenger cars and some light duty trucks and multipurpose vehicles.

**Recommended Inflation Pressure:** Vehicle manufacturer's recommended tire inflation pressure as shown on the tire placard. See *Inflation - Tire Pressure on page 326* and *Loading Your Vehicle on page 248*.

**Radial Ply Tire:** A pneumatic tire in which the ply cords that extend to the beads are laid at 90 degrees to the centerline of the tread.

**Rim:** A metal support for a tire and upon which the tire beads are seated.

**Sidewall:** The portion of a tire between the tread and the bead.

**Speed Rating:** An alphanumeric code assigned to a tire indicating the maximum speed at which a tire can operate.

**Traction:** The friction between the tire and the road surface. The amount of grip provided.

**Tread:** The portion of a tire that comes into contact with the road.

**Treadwear Indicators:** Narrow bands, sometimes called wear bars, that show across the tread of a tire when only 1/16 inch (1.6 mm) of tread remains. See *When It Is Time for New Tires on page 329*.

**UTQGS (Uniform Tire Quality Grading Standards):** A tire information system that provides consumers with ratings for a tire's traction, temperature, and treadwear. Ratings are determined by tire manufacturers using government testing procedures. The ratings are molded into the sidewall of the tire. See *Uniform Tire Quality Grading on page 332*.

**Vehicle Capacity Weight:** The number of designated seating positions multiplied by 150 lbs (68 kg) plus the rated cargo load. See *Loading Your Vehicle on page 248*.

**Vehicle Maximum Load on the Tire:** Load on an individual tire due to curb weight, accessory weight, occupant weight, and cargo weight.

**Vehicle Placard:** A label permanently attached to a vehicle showing the vehicle's capacity weight and the original equipment tire size and recommended inflation pressure. See "Tire and Loading Information Label" under *Loading Your Vehicle on page 248*.

## Inflation - Tire Pressure

Tires need the correct amount of air pressure to operate effectively.

***Notice:*** **Do not let anyone tell you that under-inflation or over-inflation is all right. It is not. If your tires do not have enough air (under-inflation), you can get the following:**

- **Too much flexing**
- **Too much heat**
- **Tire overloading**
- **Premature or irregular wear**
- **Poor handling**
- **Reduced fuel economy**

**If your tires have too much air (over-inflation), you can get the following:**

- **Unusual wear**
- **Poor handling**
- **Rough ride**
- **Needless damage from road hazards**

A Tire and Loading Information label is attached to the vehicle's center pillar (B-pillar). This label shows your vehicle's original equipment tires and the correct inflation pressures for your tires when they are cold. The recommended cold tire inflation pressure, shown on the label, is the minimum amount of air pressure needed to support your vehicle's maximum load carrying capacity.

For additional information regarding how much weight your vehicle can carry, and an example of the tire and loading information label, see *Loading Your Vehicle on page 248*. How you load your vehicle affects vehicle handling and ride comfort, never load your vehicle with more weight than it was designed to carry.

## When to Check

Check your tires once a month or more. Do not forget to check the compact spare tire, it should be at 60 psi (420 kPa). For additional information regarding the compact spare tire, see *Compact Spare Tire on page 344*.

## How to Check

Use a good quality pocket-type gage to check tire pressure. You cannot tell if your tires are properly inflated simply by looking at them. Radial tires may look properly inflated even when they are under-inflated. Check the tire's inflation pressure when the tires are cold. Cold means your vehicle has been sitting for at least three hours or driven no more than 1 mile (1.6 km).

Remove the valve cap from the tire valve stem. Press the tire gage firmly onto the valve to get a pressure measurement. If the cold tire inflation pressure matches the recommended pressure on the Tire and Loading Information label, no further adjustment is necessary. If the inflation pressure is low, add air until you reach the recommended amount.

If you overfill the tire, release air by pushing on the metal stem in the center of the tire valve. Re-check the tire pressure with the tire gage.

Be sure to put the valve caps back on the valve stems. They help prevent leaks by keeping out dirt and moisture.

## Tire Inspection and Rotation

Tires should be rotated every 5,000 to 8,000 miles (8 000 to 13 000 km).

Any time you notice unusual wear, rotate your tires as soon as possible and check wheel alignment. Also check for damaged tires or wheels. See *When It Is Time for New Tires on page 329* and *Wheel Replacement on page 333* for more information.

The purpose of regular rotation is to achieve more uniform wear for all tires on the vehicle. The first rotation is the most important. See *Part A: Scheduled Maintenance Services on page 374*.

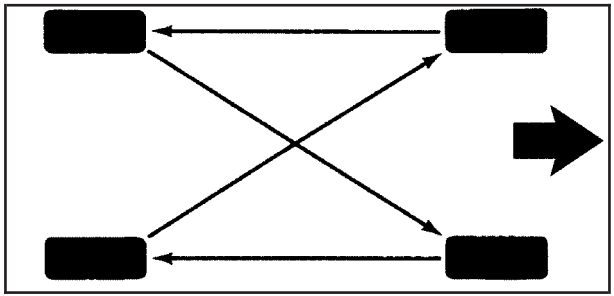

When rotating your tires, always use the correct rotation pattern shown here.

Do not include the compact spare tire in the tire rotation.

After the tires have been rotated, adjust the front and rear inflation pressures as shown on the tire and loading information label. See *Loading Your Vehicle on page 248* for an example of the tire and loading information label and where it is located on your vehicle. Make certain that all wheel nuts are properly tightened. See “Wheel Nut Torque” under *Capacities and Specifications on page 368*.

## ⚠ CAUTION:

**Rust or dirt on a wheel, or on the parts to which it is fastened, can make wheel nuts become loose after a time. The wheel could come off and cause an accident. When you change a wheel, remove any rust or dirt from places where the wheel attaches to the vehicle. In an emergency, you can use a cloth or a paper towel to do this; but be sure to use a scraper or wire brush later, if needed, to get all the rust or dirt off. See *Changing a Flat Tire on page 336*.**

## When It Is Time for New Tires

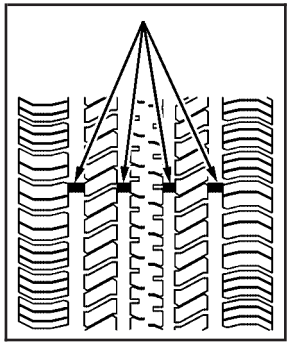

One way to tell when it is time for new tires is to check the treadwear indicators, which will appear when your tires have only 1/16 inch (1.6 mm) or less of tread remaining.

You need a new tire if any of the following statements are true:

- You can see the indicators at three or more places around the tire.
- You can see cord or fabric showing through the tire's rubber.
- The tread or sidewall is cracked, cut, or snagged deep enough to show cord or fabric.
- The tire has a bump, bulge, or split.
- The tire has a puncture, cut, or other damage that cannot be repaired well because of the size or location of the damage.

## Buying New Tires

GM has developed and matched specific tires for your vehicle. If you need replacement tires, GM strongly recommends that you get tires that are the same size, brand, load range, speed rating, and construction type (radial and bias-belted tires) as your vehicle's original tires. This way, your vehicle will continue to have tires that are designed to give the same performance and vehicle safety, during normal use, as the original tires. See *Tire Sidewall Labeling on page 320* for additional information.

### ⚠ CAUTION:

**Mixing tires could cause you to lose control while driving. If you mix tires of different sizes, brands, or types (radial and bias-belted tires), the vehicle may not handle properly, and you could have a crash. Using tires of different sizes, brands, or types may also cause damage to your vehicle. Be sure to use the correct size, brand, and type of tires on all wheels. It is all right to drive with your compact spare temporarily, as it was developed for use on your vehicle. See *Compact Spare Tire on page 344*.**

**⚠ CAUTION:**

**If you use bias-ply tires on your vehicle, the wheel rim flanges could develop cracks after many miles of driving. A tire and/or wheel could fail suddenly, causing a crash. Use only radial-ply tires with the wheels on your vehicle.**

Your vehicle's original equipment tires are listed on the Tire and Loading Information Label. This label is attached to the vehicle's center pillar (B-pillar). See *Loading Your Vehicle on page 248*, for more information about the Tire and Loading Information Label.

## Different Size Tires and Wheels

If you add wheels or tires that are a different size than your original equipment wheels and tires, this may affect the way your vehicle performs, including its braking, ride and handling characteristics, stability, and resistance to rollover. Additionally, if your vehicle has electronic systems such as, anti-lock brakes, traction control, and electronic stability control, the performance of these systems can be affected.

**⚠ CAUTION:**

**If you add different sized wheels, your vehicle may not provide an acceptable level of performance and safety if tires not recommended for those wheels are selected. You may increase the chance that you will crash and suffer serious injury. Only use GM specific wheel and tire systems developed for your vehicle, and have them properly installed by a GM certified technician.**

See *Buying New Tires on page 330* and *Accessories and Modifications on page 264* for additional information.

## Uniform Tire Quality Grading

Quality grades can be found where applicable on the tire sidewall between tread shoulder and maximum selection width. For example:

### Treadwear 200 Traction AA Temperature A

The following information relates to the system developed by the Unites States National Highway Traffic Safety Administration (NHTSA), which grades tires by treadwear, traction, and temperature performance. This applies only to vehicles sold in the United States. The grades are molded on the sidewalls of most passenger car tires. The Uniform Tire Quality Grading (UTQG) system does not apply to deep tread, winter-type snow tires, space-saver, or temporary use spare tires, tires with nominal rim diameters of 10 to 12 inches (25 to 30 cm), or to some limited-production tires.

While the tires available on General Motors passenger cars and light trucks may vary with respect to these grades, they must also conform to federal safety requirements.

### Treadwear

The treadwear grade is a comparative rating based on the wear rate of the tire when tested under controlled conditions on a specified government test course. For example, a tire graded 150 would wear one and a half (1½) times as well on the government course as a tire graded 100. The relative performance of tires depends upon the actual conditions of their use, however, and may depart significantly from the norm due to variations in driving habits, service practices, and differences in road characteristics and climate.

### Traction — AA, A, B, C

The traction grades, from highest to lowest, are AA, A, B, and C. Those grades represent the tire's ability to stop on wet pavement as measured under controlled conditions on specified government test surfaces of asphalt and concrete. A tire marked C may have poor traction performance.

**Warning:** The traction grade assigned to this tire is based on straight-ahead braking traction tests, and does not include acceleration, cornering, hydroplaning, or peak traction characteristics.

### Temperature — A, B, C

The temperature grades are A (the highest), B, and C, representing the tire's resistance to the generation of heat and its ability to dissipate heat when tested under controlled conditions on a specified indoor laboratory test wheel. Sustained high temperature can cause the material of the tire to degenerate and reduce tire life, and excessive temperature can lead to sudden tire failure. The grade C corresponds to a level of performance which all passenger car tires must meet under the Federal Motor Vehicle Safety Standard No. 109. Grades B and A represent higher levels of performance on the laboratory test wheel than the minimum required by law.

**Warning:** The temperature grade for this tire is established for a tire that is properly inflated and not overloaded. Excessive speed, underinflation, or excessive loading, either separately or in combination, can cause heat buildup and possible tire failure.

## Wheel Alignment and Tire Balance

The tires and wheels on your vehicle were aligned and balanced carefully at the factory to give you the longest tire life and best overall performance. Adjustments to wheel alignment and tire balancing will not be necessary on a regular basis. However, if you notice unusual tire wear or your vehicle pulling to one side or the other, the alignment may need to be checked. If you notice your vehicle vibrating when driving on a smooth road, your tires and wheels may need to be rebalanced. See your dealer for proper diagnosis.

## Wheel Replacement

Replace any wheel that is bent, cracked, or badly rusted or corroded. If wheel nuts keep coming loose, the wheel, wheel bolts, and wheel nuts should be replaced. If the wheel leaks air, replace it (except some aluminum wheels, which can sometimes be repaired). See your dealer if any of these conditions exist.

Your dealer will know the kind of wheel you need.

Each new wheel should have the same load-carrying capacity, diameter, width, offset and be mounted the same way as the one it replaces.

If you need to replace any of your wheels, wheel bolts, or wheel nuts, replace them only with new GM original equipment parts. This way, you will be sure to have the right wheel, wheel bolts, and wheel nuts for your vehicle.

**⚠ CAUTION:**

**Using the wrong replacement wheels, wheel bolts, or wheel nuts on your vehicle can be dangerous. It could affect the braking and handling of your vehicle, make your tires lose air and make you lose control. You could have a collision in which you or others could be injured. Always use the correct wheel, wheel bolts, and wheel nuts for replacement.**

***Notice:*** **The wrong wheel can also cause problems with bearing life, brake cooling, speedometer or odometer calibration, headlamp aim, bumper height, vehicle ground clearance, and tire or tire chain clearance to the body and chassis.**

See *Changing a Flat Tire on page 336* for more information.

## Used Replacement Wheels

**⚠ CAUTION:**

**Putting a used wheel on your vehicle is dangerous. You cannot know how it has been used or how far it has been driven. It could fail suddenly and cause a crash. If you have to replace a wheel, use a new GM original equipment wheel.**

## Tire Chains

***Notice:*** **Use tire chains only where legal and only when you must. Use only SAE Class "S" type chains that are the proper size for your tires. Install them on the front tires and tighten them as tightly as possible with the ends securely fastened. Drive slowly and follow the chain manufacturer's instructions. If you can hear the chains contacting your vehicle, stop and retighten them. If the contact continues, slow down until it stops. Driving too fast or spinning the wheels with chains on will damage your vehicle.**

## If a Tire Goes Flat

It is unusual for a tire to blowout while you are driving, especially if you maintain your vehicle's tires properly. If air goes out of a tire, it is much more likely to leak out slowly. But if you should ever have a blowout, here are a few tips about what to expect and what to do:

If a front tire fails, the flat tire will create a drag that pulls the vehicle toward that side. Take your foot off the accelerator pedal and grip the steering wheel firmly. Steer to maintain lane position, and then gently brake to a stop well out of the traffic lane.

A rear blowout, particularly on a curve, acts much like a skid and may require the same correction you would use in a skid. In any rear blowout remove your foot from the accelerator pedal. Get the vehicle under control by steering the way you want the vehicle to go. It may be very bumpy and noisy, but you can still steer. Gently brake to a stop, well off the road if possible.

**⚠ CAUTION:**

**Lifting a vehicle and getting under it to do maintenance or repairs is dangerous without the appropriate safety equipment and training. The jack provided with your vehicle is designed only for changing a flat tire. If it is used for anything else, you or others could be badly injured or killed if the vehicle slips off the jack. Use the jack provided with your vehicle only for changing a flat tire.**

If a tire goes flat, the next part shows how to use the jacking equipment to change a flat tire safely.

## Changing a Flat Tire

If a tire goes flat, avoid further tire and wheel damage by driving slowly to a level place. Turn on your hazard warning flashers.

**⚠ CAUTION:**

**Changing a tire can be dangerous. The vehicle can slip off the jack and roll over or fall on you or other people. You and they could be badly injured or even killed. Find a level place to change your tire. To help prevent the vehicle from moving:**

1. **Set the parking brake firmly.**
2. **Put an automatic transaxle shift lever in PARK (P), or shift a manual transaxle to FIRST (1) or REVERSE (R).**

**CAUTION: (Continued)**

**CAUTION: (Continued)**

3. **Turn off the engine and do not restart while the vehicle is raised.**
4. **Do not allow passengers to remain in the vehicle.**

**To be even more certain the vehicle will not move, you should put blocks at the front and rear of the tire farthest away from the one being changed. That would be the tire on the other side, at the opposite end of the vehicle.**

When you have a flat tire, use the following example as a guide to assist you in the placement of wheel blocks.

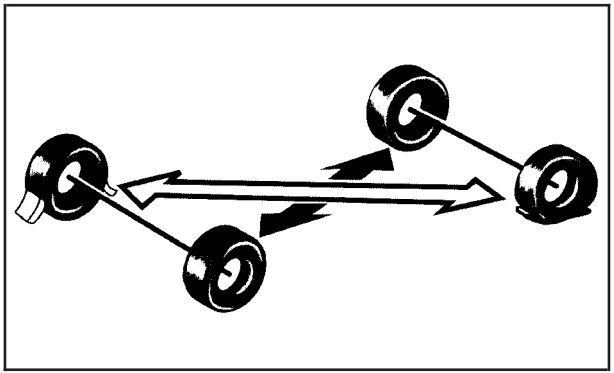

The following information will tell you how to use the jack and change a tire.

## Removing the Spare Tire and Tools

The compact spare tire and tools you will need are located in the trunk.

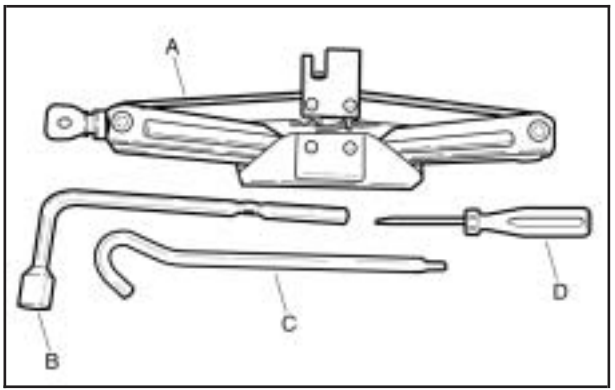


A. Jack
B. Wheel Wrench
C. Jack Handle
D. Screwdriver

1. Open the trunk or liftgate. See *Trunk on page 98* or *Liftgate (Hatchback) on page 100* for more information.
2. Lift the trim cover.

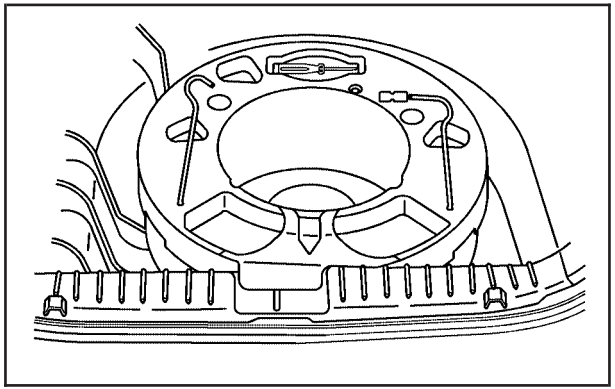

3. Remove the foam tray.
4. Remove the jack, the jack handle and the wheel wrench from the foam tray.

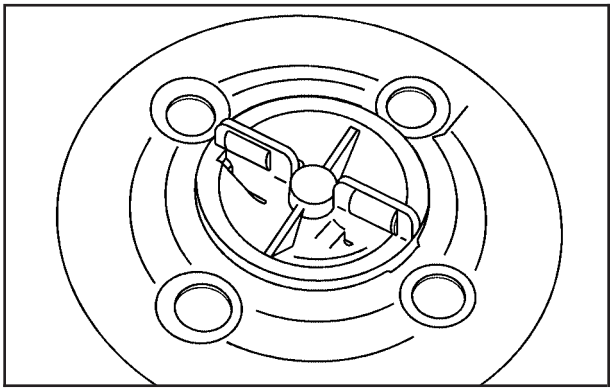

5. Turn the retainer counterclockwise and remove it from the compact spare.
6. Remove the compact spare tire. See *Compact Spare Tire on page 344* for more information.

## Removing the Flat Tire and Installing the Spare Tire

1. If your vehicle has wheel covers, loosen the four plastic caps by hand or by using the wheel wrench. The plastic nuts do not come off of the cover.
2. Remove the wheel cover using the flat end of the jack handle. Pry along the edge of the wheel cover until it comes off.

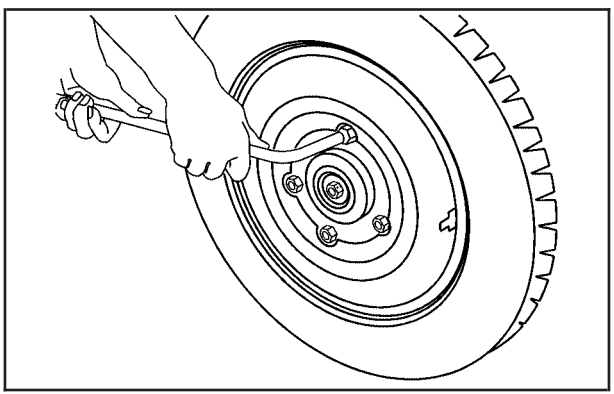

3. Use the wheel wrench to loosen all the wheel nuts. Do not remove them yet.

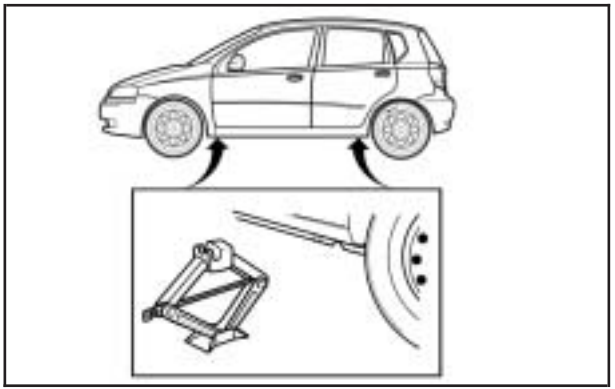

**Hatchback**

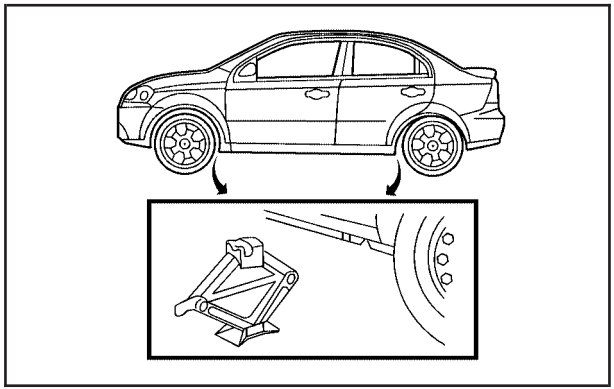

**Sedan**

4. Locate the notch in the frame near each wheel which the jack head fits in.
5. Position the jack and raise the jack head until it fits firmly into the notch in the vehicle's frame nearest the flat tire.
6. Put the compact spare tire near you.

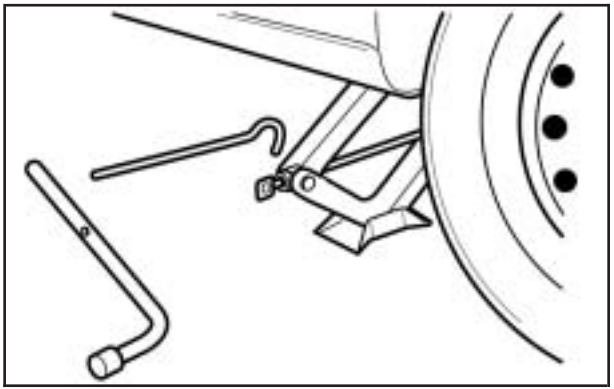

7. Insert the jack handle into the jack and the wheel wrench onto the end of the jack handle.

**⚠ CAUTION:**

**Getting under a vehicle when it is jacked up is dangerous. If the vehicle slips off the jack you could be badly injured or killed. Never get under a vehicle when it is supported only by a jack.**

**⚠ CAUTION:**

**Raising your vehicle with the jack improperly positioned can damage the vehicle and even make the vehicle fall. To help avoid personal injury and vehicle damage, be sure to fit the jack lift head into the proper location before raising the vehicle.**

8. Raise the vehicle by turning the wheel wrench clockwise. Raise the vehicle far enough off the ground so there is enough room for the compact spare tire to fit underneath the wheel well.
9. Remove all of the wheel nuts by turning them counterclockwise.
10. Remove the flat tire.

## ⚠ CAUTION:

**Rust or dirt on the wheel, or on the parts to which it is fastened, can make the wheel nuts become loose after time. The wheel could come off and cause an accident. When you change a wheel, remove any rust or dirt from the places where the wheel attaches to the vehicle. In an emergency, you can use a cloth or a paper towel to do this; but be sure to use a scraper or wire brush later, if needed, to get all the rust or dirt off.**

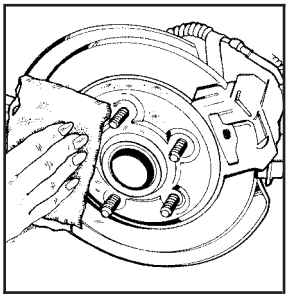

11. Remove any rust or dirt from the wheel bolts, mounting surfaces and spare wheel.

12. Place the compact spare tire on the wheel-mounting surface.

## ⚠ CAUTION:

**Never use oil or grease on studs or nuts. If you do, the nuts might come loose. Your wheel could fall off, causing a serious accident.**

13. Install the wheel nuts with the rounded end of the nuts toward the wheel. Tighten each nut by hand clockwise until the wheel is held against the hub.
14. Lower the vehicle by turning the wheel wrench counterclockwise. Lower the jack completely.

## ⚠ CAUTION:

**Incorrect wheel nuts or improperly tightened wheel nuts can cause the wheel to come loose and even come off. This could lead to an accident. Be sure to use the correct wheel nuts. If you have to replace them, be sure to get new GM original equipment wheel nuts. Stop somewhere as soon as you can and have the nuts tightened with a torque wrench to the proper torque specification. See *Capacities and Specifications on page 368* for wheel nut torque specification.**

***Notice:*** **Improperly tightened wheel nuts can lead to brake pulsation and rotor damage. To avoid expensive brake repairs, evenly tighten the wheel nuts in the proper sequence and to the proper torque specification. See *Capacities and Specifications on page 368* for the wheel nut torque specification.**

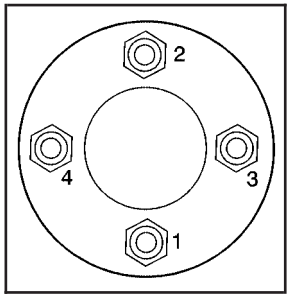


15. Tighten the wheel nuts firmly in a crisscross sequence, as shown.

***Notice:*** **Wheel covers will not fit on your compact spare. If you try to put a wheel cover on the compact spare, you could damage the cover or the spare.**

Do not try to put a wheel cover on your compact spare tire. It will not fit. Store the wheel cover in the cargo area until you have the flat tire repaired or replaced.

## Storing a Flat or Spare Tire and Tools

**⚠ CAUTION:**

**Storing a jack, a tire, or other equipment in the passenger compartment of the vehicle could cause injury. In a sudden stop or collision, loose equipment could strike someone. Store all these in the proper place.**

To store a flat or compact spare tire and tools, do the following:

1. Store the flat tire or the compact spare in the compact spare tire compartment.
2. Secure the retainer.
3. Store the tools securely in the foam tray and place the tray back in the cargo area.
4. Replace the trim cover.

The compact spare tire is for temporary use only. Replace the compact spare tire with a full-size tire as soon as you can. See *Compact Spare Tire on page 344*.

## Compact Spare Tire

Although the compact spare tire was fully inflated when your vehicle was new, it can lose air after a time. Check the inflation pressure regularly. It should be 60 psi (420 kPa).

After installing the compact spare on your vehicle, you should stop as soon as possible and make sure your spare tire is correctly inflated. The compact spare is made to perform well at speeds up to 50 mph (80 km/h), so you can finish your trip and have your full-size tire repaired or replaced where you want. Of course, it is best to replace your spare with a full-size tire as soon as you can. Your spare will last longer and be in good shape in case you need it again.

***Notice:*** **When the compact spare is installed, do not take your vehicle through an automatic car wash with guide rails. The compact spare can get caught on the rails. That can damage the tire and wheel, and maybe other parts of your vehicle.**

Do not use your compact spare on other vehicles.

And do not mix your compact spare tire or wheel with other wheels or tires. They will not fit. Keep your spare tire and its wheel together.

***Notice:*** **Tire chains will not fit your compact spare. Using them can damage your vehicle and can damage the chains too. Do not use tire chains on your compact spare.**

# Appearance Care

## Cleaning the Inside of Your Vehicle

Your vehicle's interior will continue to look its best if it is cleaned often. Although not always visible, dust and dirt can accumulate on your upholstery. Dirt can damage carpet, fabric, leather, and plastic surfaces. Regular vacuuming is recommended to remove particles from your upholstery. It is important to keep your upholstery from becoming and remaining heavily soiled. Soils should be removed as quickly as possible. Your vehicle's interior may experience extremes of heat that could cause stains to set rapidly.

Lighter colored interiors may require more frequent cleaning. Use care because newspapers and garments that transfer color to your home furnishings may also transfer color to your vehicle's interior.

When cleaning your vehicle's interior, only use cleaners specifically designed for the surfaces being cleaned. Permanent damage may result from using cleaners on surfaces for which they were not intended. Use glass cleaner only on glass. Remove any accidental over-spray from other surfaces immediately. To prevent over-spray, apply cleaner directly to the cleaning cloth.

***Notice:*** **If you use abrasive cleaners when cleaning glass surfaces on your vehicle, you could scratch the glass and/or cause damage to the rear window defogger. When cleaning the glass on your vehicle, use only a soft cloth and glass cleaner.**

Many cleaners contain solvents that may become concentrated in your vehicle's breathing space. Before using cleaners, read and adhere to all safety instructions on the label. While cleaning your vehicle's interior, maintain adequate ventilation by opening your vehicle's doors and windows.

Dust may be removed from small buttons and knobs using a small brush with soft bristles.

Your GM dealer has a product for cleaning your vehicle's glass. Should it become necessary, you can also obtain a product from your GM dealer to remove odors from your vehicle's upholstery.

Do not clean your vehicle using the following cleaners or techniques:

- Never use a knife or any other sharp object to remove a soil from any interior surface.
- Never use a stiff brush. It can cause damage to your vehicle's interior surfaces.
- Never apply heavy pressure or rub aggressively with a cleaning cloth. Use of heavy pressure can damage your interior and does not improve the effectiveness of soil removal.
- Use only mild, neutral-pH soaps. Avoid laundry detergents or dishwashing soaps with degreasers. Using too much soap will leave a residue that leaves streaks and attracts dirt. For liquid cleaners, about 20 drops per gallon (3.78 L) of water is a good guide.
- Do not heavily saturate your upholstery while cleaning.
- Damage to your vehicle's interior may result from the use of many organic solvents such as naptha, alcohol, etc.

## Fabric/Carpet

Use a vacuum cleaner with a soft brush attachment frequently to remove dust and loose dirt. A canister vacuum with a beater bar in the nozzle may only be used on floor carpet and carpeted floor mats. For soils, always try to remove them first with plain water or club soda. Before cleaning, gently remove as much of the soil as possible using one of the following techniques:

- For liquids: gently blot the remaining soil with a paper towel. Allow the soil to absorb into the paper towel until no more can be removed.
- For solid dry soils: remove as much as possible and then vacuum.

To clean, use the following instructions:

1. Saturate a lint-free, clean white cloth with water or club soda.
2. Wring the cloth to remove excess moisture.
3. Start on the outside edge of the soil and gently rub toward the center. Continue cleaning, using a clean area of the cloth each time it becomes soiled.
4. Continue to gently rub the soiled area until the cleaning cloth remains clean.
5. If the soil is not completely removed, use a mild soap solution and repeat the cleaning process that was used with plain water.

If any of the soil remains, a commercial fabric cleaner or spot lifter may be necessary. When a commercial upholstery cleaner or spot lifter is to be used, test a small hidden area for colorfastness first. If the locally cleaned area gives any impression that a ring formation may result, clean the entire surface.

After the cleaning process has been completed, a paper towel can be used to blot excess moisture from the fabric or carpet.

## Leather

A soft cloth dampened with water may be used to remove dust. If a more thorough cleaning is necessary, a soft cloth dampened with a mild soap solution can be used. Allow the leather to dry naturally. Do not use heat to dry. Never use steam to clean leather. Never use spot lifters or spot removers on leather. Many commercial leather cleaners and coatings that are sold to preserve and protect leather may permanently change the appearance and feel of your leather and are not recommended. Do not use silicone or wax-based products, or those containing organic solvents to clean your vehicle's interior because they can alter the appearance by increasing the gloss in a non-uniform manner. Never use shoe polish on your leather.

## Instrument Panel, Vinyl, and Other Plastic Surfaces

A soft cloth dampened with water may be used to remove dust. If a more thorough cleaning is necessary, a clean soft cloth dampened with a mild soap solution can be used to gently remove dust and dirt. Never use spot lifters or removers on plastic surfaces. Many commercial cleaners and coatings that are sold to preserve and protect soft plastic surfaces may permanently change the appearance and feel of your interior and are not recommended. Do not use silicone or wax-based products, or those containing organic solvents to clean your vehicle's interior because they can alter the appearance by increasing the gloss in a non-uniform manner.

Some commercial products may increase gloss on your instrument panel. The increase in gloss may cause annoying reflections in the windshield and even make it difficult to see through the windshield under certain conditions.

## Care of Safety Belts

Keep belts clean and dry.

**⚠ CAUTION:**

**Do not bleach or dye safety belts. If you do, it may severely weaken them. In a crash, they might not be able to provide adequate protection. Clean safety belts only with mild soap and lukewarm water.**

## Weatherstrips

Silicone grease on weatherstrips will make them last longer, seal better, and not stick or squeak. Apply silicone grease with a clean cloth. During very cold, damp weather frequent application may be required.

## Washing Your Vehicle

The paint finish on the vehicle provides beauty, depth of color, gloss retention, and durability.

The best way to preserve the vehicle's finish is to keep it clean by washing it often with lukewarm or cold water.

Do not wash the vehicle in the direct rays of the sun. Use a car washing soap. Do not use strong soaps or chemical detergents. Be sure to rinse the vehicle well, removing all soap residue completely. GM-approved cleaning products can be obtained from your dealer. See *Vehicle Care/Appearance Materials on page 353*. Do not use cleaning agents that are petroleum based, or that contain acid or abrasives. All cleaning agents should be flushed promptly and not allowed to dry on the surface, or they could stain. Dry the finish with a soft, clean chamois or an all-cotton towel to avoid surface scratches and water spotting.

High pressure car washes may cause water to enter the vehicle.

## Cleaning Exterior Lamps/Lenses

Use only lukewarm or cold water, a soft cloth and a car washing soap to clean exterior lamps and lenses. Follow instructions under *Washing Your Vehicle on page 349*.

## Finish Care

Occasional waxing or mild polishing of the vehicle by hand may be necessary to remove residue from the paint finish. GM-approved cleaning products can be obtained from your dealer. See *Vehicle Care/Appearance Materials on page 353*.

***Notice:*** **Machine compounding or aggressive polishing on a basecoat/clearcoat paint finish may damage it. Use only non-abrasive waxes and polishes that are made for a basecoat/clearcoat paint finish on your vehicle.**

The vehicle has a basecoat/clearcoat paint finish. The clearcoat gives more depth and gloss to the colored basecoat. Always use waxes and polishes that are non-abrasive and made for a basecoat/clearcoat paint finish.

Foreign materials such as calcium chloride and other salts, ice melting agents, road oil and tar, tree sap, bird droppings, chemicals from industrial chimneys, etc., can damage the vehicle's finish if they remain on painted surfaces. Wash the vehicle as soon as possible. If necessary, use non-abrasive cleaners that are marked safe for painted surfaces to remove foreign matter.

Exterior painted surfaces are subject to aging, weather, and chemical fallout that can take their toll over a period of years. To help keep the paint finish looking new, keep the vehicle in a garage or covered whenever possible.

## Windshield and Wiper Blades

If the windshield is not clear after using the windshield washer, or if the wiper blade chatters when running, wax, sap, or other material may be on the blade or windshield.

Clean the outside of the windshield with a glass cleaning liquid or powder and water solution. The windshield is clean if beads do not form when it is rinsed with water.

Grime from the windshield will stick to the wiper blades and affect their performance. Clean the blade by wiping vigorously with a cloth soaked in full-strength windshield washer solvent. Then rinse the blade with water.

Check the wiper blades and clean them as necessary; replace blades that look worn.

## Aluminum Wheels

***Notice:*** **If you use strong soaps, chemicals, abrasive polishes, cleaners, brushes, or cleaners that contain acid on aluminum or chrome-plated wheels, you could damage the surface of the wheel(s). The repairs would not be covered by your warranty. Use only GM-approved cleaners on aluminum or chrome-plated wheels.**

Keep the wheels clean using a soft clean cloth with mild soap and water. Rinse with clean water. After rinsing thoroughly, dry with a soft clean towel. A wax may then be applied.

***Notice:*** **Using chrome polish on aluminum wheels could damage the wheels. The repairs would not be covered by your warranty. Use chrome polish on chrome wheels only.**

The surface of these wheels is similar to the painted surface of the vehicle. Do not use strong soaps, chemicals, abrasive polishes, abrasive cleaners, cleaners with acid, or abrasive cleaning brushes on them because the surface could be damaged. Do not use chrome polish on aluminum wheels.

***Notice:*** **If you drive your vehicle through an automatic car wash that has silicone carbide tire cleaning brushes, you could damage the aluminum or chrome-plated wheels. The repairs would not be covered by your warranty. Never drive a vehicle equipped with aluminum or chrome-plated wheels through an automatic car wash that uses silicone carbide tire cleaning brushes.**

Do not take the vehicle through an automatic car wash that has silicone carbide tire cleaning brushes. These brushes can also damage the surface of these wheels.

## Tires

To clean the tires, use a stiff brush with tire cleaner.

***Notice:*** **Using petroleum-based tire dressing products on your vehicle may damage the paint finish and/or tires. When applying a tire dressing, always wipe off any overspray from all painted surfaces on your vehicle.**

## Sheet Metal Damage

If the vehicle is damaged and requires sheet metal repair or replacement, make sure the body repair shop applies anti-corrosion material to parts repaired or replaced to restore corrosion protection.

Original manufacturer replacement parts will provide the corrosion protection while maintaining the warranty.

## Finish Damage

Any stone chips, fractures or deep scratches in the finish should be repaired right away. Bare metal will corrode quickly and may develop into major repair expense.

Minor chips and scratches can be repaired with touch-up materials available from your GM dealer. Larger areas of finish damage can be corrected in your GM dealer's body and paint shop.

## Underbody Maintenance

Chemicals used for ice and snow removal and dust control can collect on the underbody. If these are not removed, corrosion and rust can develop on the underbody parts such as fuel lines, frame, floor pan, and exhaust system even though they have corrosion protection.

At least every spring, flush these materials from the underbody with plain water. Clean any areas where mud and debris can collect. Dirt packed in close areas of the frame should be loosened before being flushed. Your dealer or an underbody car washing system can do this for you.

## Chemical Paint Spotting

Some weather and atmospheric conditions can create a chemical fallout. Airborne pollutants can fall upon and attack painted surfaces on the vehicle. This damage can take two forms: blotchy, ring-shaped discolorations, and small, irregular dark spots etched into the paint surface.

Although no defect in the paint job causes this, GM will repair, at no charge to the owner, the surfaces of new vehicles damaged by this fallout condition within 12 months or 12,000 miles (20 000 km) of purchase, whichever occurs first.

## Vehicle Care/Appearance Materials

| Description | Usage |
|---|---|
| Polishing Cloth Wax-Treated | Interior and exterior polishing cloth. |
| Tar and Road Oil Remover | Removes tar, road oil and asphalt. |
| Chrome Cleaner and Polish | Use on chrome or stainless steel. |
| White Sidewall Tire Cleaner | Removes soil and black marks from whitewalls. |
| Vinyl Cleaner | Cleans vinyl. |
| Glass Cleaner | Removes dirt, grime, smoke and fingerprints. |
| Chrome and Wire Wheel Cleaner | Removes dirt and grime from chrome wheels and wire wheel covers. |
| Finish Enhancer | Removes dust, fingerprints, and surface contaminants. Spray on wipe off. |

| Description | Usage |
|---|---|
| Swirl Remover Polish | Removes swirl marks, fine scratches and other light surface contamination. |
| Cleaner Wax | Removes light scratches and protects finish. |
| Foaming Tire Shine Low Gloss | Cleans, shines and protects in one easy step, no wiping necessary. |
| Wash Wax Concentrate | Medium foaming shampoo. Cleans and lightly waxes. Biodegradable and phosphate free. |
| Spot Lifter | Quickly and easily removes spots and stains from carpets, vinyl and cloth upholstery. |
| Odor Eliminator | Odorless spray odor eliminator used on fabrics, vinyl, leather and carpet. |

# Vehicle Identification

## Vehicle Identification Number (VIN)

This is the legal identifier for your vehicle. It appears on a plate in the front corner of the instrument panel, on the driver's side. You can see it if you look through the windshield from outside your vehicle. The VIN also appears on the Vehicle Certification and Service Parts labels and the certificates of title and registration.

### Engine Identification

The eighth character in your VIN is the engine code. This code will help you identify your engine, specifications and replacement parts.

## Service Parts Identification Label

You will find this label on the inside of the glove box. It is very helpful if you ever need to order parts. On this label, you will find the following:

- VIN
- Model designation
- Paint information
- Production options and special equipment

Do not remove this label from the vehicle.

# Electrical System

## Add-On Electrical Equipment

***Notice:*** **Do not add anything electrical to your vehicle unless you check with your dealer first. Some electrical equipment can damage your vehicle and the damage would not be covered by your warranty. Some add-on electrical equipment can keep other components from working as they should.**

Add-on equipment can drain your vehicle's battery, even if your vehicle is not operating.

Your vehicle has an airbag system. Before attempting to add anything electrical to your vehicle, see *Servicing Your Airbag-Equipped Vehicle on page 82*.

## Headlamp Wiring

The headlamp wiring is protected by fuses, one for each headlamp, in the fuse block. An electrical overload will cause the lamps to turn off. If this happens, have your headlamp wiring checked right away.

## Windshield Wiper Fuses

The windshield wiper motor is protected by an internal circuit breaker and a fuse. If the motor overheats due to heavy snow, etc., the wiper will stop until the motor cools. If the overload is caused by some electrical problem and not snow, etc., be sure to get it fixed.

## Power Windows and Other Power Options

Circuit breakers in the fuse block protect the power windows and other power accessories. When the current load is too heavy, the circuit breaker opens and closes, protecting the circuit until the problem is fixed or goes away.

## Fuses and Circuit Breakers

The wiring circuits in your vehicle are protected from short circuits by a combination of fuses, circuit breakers and fusible thermal links in the wiring itself.

Look at the silver-colored band inside the fuse. If the band is broken or melted, replace the fuse. Be sure you replace a bad fuse with a new one of the identical size and rating.

There are spare fuses provided in the engine compartment fuse block. If you ever have a problem on the road and do not have a spare fuse, you can borrow one that has the same amperage. Just pick a feature of your vehicle that you can get along without — like the radio or cigarette lighter — and use its fuse, if it is the correct amperage. Replace it as soon as you can.

There are two fuse blocks in your vehicle: the instrument panel fuse block and the engine compartment fuse block.

There is a fuse puller located on the engine compartment fuse block. It can be used to easily remove fuses from the fuse block.

## Instrument Panel Fuse Block

The instrument panel fuse block is located on the end of the instrument panel on the driver's side of the vehicle.

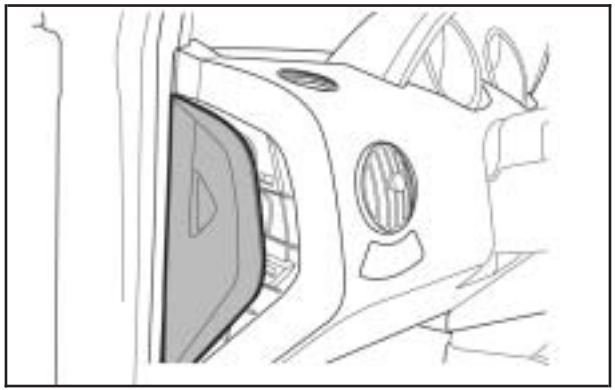

**Hatchback**

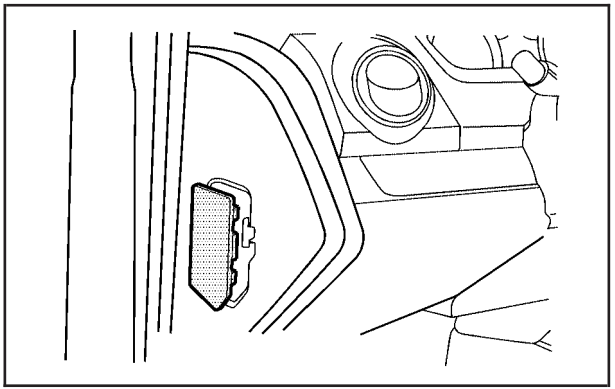

**Sedan**

To access the fuses, open the fuse panel door by pulling the door out.

To reinstall the door, first insert the rear edge of the fuse panel door, then push the front of the door into the end of the instrument panel to secure it.

| | | | |
|---|---|---|---|
| | AUX LTR | | HORN, REAR/FOG |
| | LTR | | STOP |
| | RADIO, CLK | | CLSTR, HAZRD |
| | TRN/SIG | | DR/LCK |
| | CLSTR, CLK | | ECM, TCM |
| | BCK/UP | | WPR, WSWA |
| | ECM, TCM | | ENG FUSE |
| | ALTERNATOR | | HVAC |
| | AIRBAG 1 | | |
| | ABS | | DIODE (ABS) |
| | AIRBAG 2 | | |
| | CLK, RADIO | | |

**Hatchback**

| Fuses | Usage |
|---|---|
| AUX LTR | Auxiliary Cigarette Lighter |
| HORN, REAR/FOG | Horn, Rear Fog Lamps |
| LTR | Cigarette Lighter |
| STOP | Stop Lamp |
| RADIO, CLK | Audio, Clock |
| CLSTR, HAZRD | Instrument Panel Cluster, Hazard Flasher |
| TRN/SIG | Turn Signal |
| DR/LCK | Door Lock, Remote Keyless Entry |
| CLSTR, CLK | Instrument Panel Cluster, Clock |
| ECM, TCM | Engine Control Module (ECM), Transaxle Control Module (TCM) |
| BCK/UP | Back-Up Lamp |
| WPR, WSWA | Wiper, Washer |
| ECM, TCM | Engine Control Module (ECM), Transmission Control Module (TCM) |
| ENG FUSE | Engine Fuse |
| ALTERNATOR | Alternator |

| Fuses | Usage |
|---|---|
| HVAC | HVAC Blower |
| AIRBAG 1 | Airbag 1 |
| BLANK | Not Used |
| ABS | Anti-lock Brake System |
| DIODE (ABS) | Anti-lock Brake System Diode |
| AIRBAG 2 | Airbag 2 |
| BLANK | Not Used |
| CLK, RADIO | Clock, Audio |

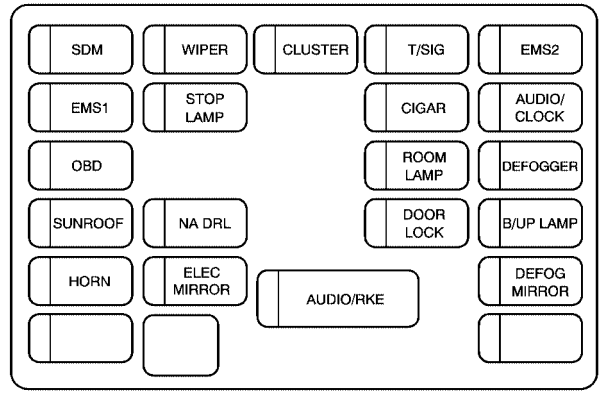


**Sedan**

| Fuses | Usage |
|---|---|
| SDM | Sensing and Diagnostic Module |
| WIPER | Windshield Wiper Switch, Windshield Wiper Motor |
| CLUSTER | Instrument Panel Cluster, Brake Switch, Anti-theft Mode |
| T/SIG | Turn Signal, Hazard Switch |
| EMS2 | Stoplamp Switch |

| Fuses | Usage |
|---|---|
| EMS1 | Engine Room Fuse Block, Rear HO2S, Transaxle Control Module, VSS, Fuel Pump |
| STOP LAMP | Brake Switch |
| CIGAR | Cigarette Lighter, Auxiliary Power Outlet |
| AUDIO/CLOCK | Radio, Clock |
| OBD | On-Board Diagnostics, Immobilizer |
| ROOM LAMP | Trunk Lamp, Trunk Open Switch, Cluster, Dome Lamp |
| DEFOGGER | Rear Defogger |
| SUNROOF | Sunroof Module (Option) |
| DRL | Daytime Running Lamps |

| Fuses | Usage |
|---|---|
| DOOR LOCK | Door Lock/Unlock |
| B/UP LAMP | Back-up Lamps |
| HORN | Horn |
| ELEC MIRROR | Mirror Control Switch, Dome Lamp, Air Conditioning Switch |
| AUDIO/RKE | Radio, Remote Keyless Entry, Clock, Power Mirror Unit, Anti-Theft Module |
| DEFOG MIRROR | Power Mirror Unit, Air Conditioning Switch |
| BLANK | Not Used |
| BLANK | Not Used |
| BLANK | Not Used |

## Engine Compartment Fuse Block

The engine compartment fuse block is located on the driver's side of the vehicle, near the battery. See *Engine Compartment Overview on page 276* for more information on location.

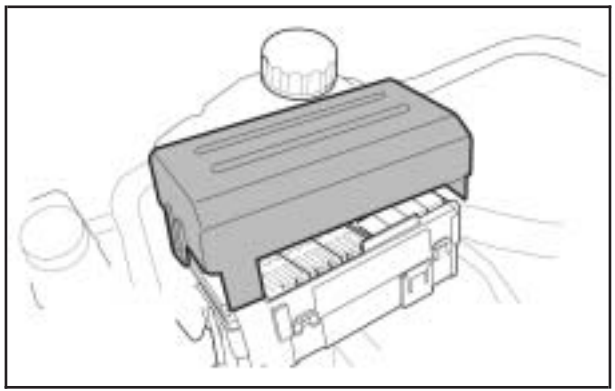

**Hatchback**

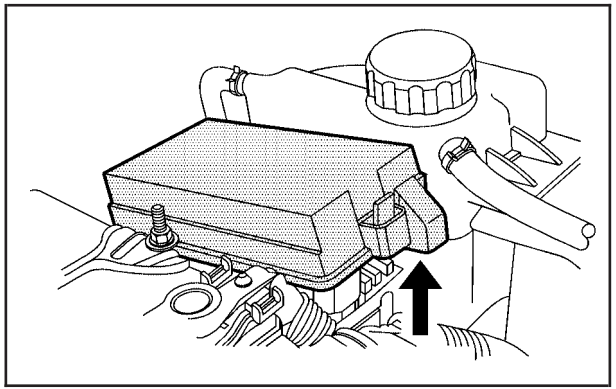

**Sedan**

To access the fuses, pull out the top and bottom flaps to release the cover. To reinstall the cover, push the cover until it is secure.

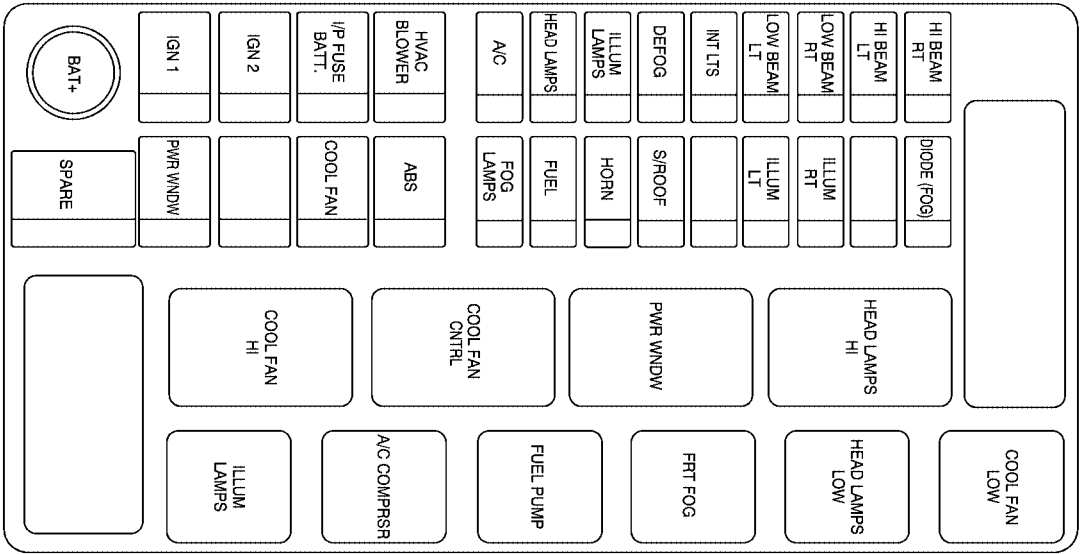


**Hatchback**

| Fuses | Usage |
|---|---|
| HI BEAM RT | Passenger's Side Headlamp High |
| DIODE (FOG) | Fog Lamp Diode |

| Fuses | Usage |
|---|---|
| HI BEAM LT | Driver's Side Headlamp High |
| BLANK | Not Used |

| Fuses | Usage |
|---|---|
| LOW BEAM RT | Passenger's Side Headlamp Low |
| ILLUM RT | Parking Lamp Right Side, Illumination Circuit |
| LOW BEAM LT | Driver's Side Headlamp Low |
| ILLUM LT | Driver's Side Parking Lamp, License Plate Lamp |
| INT LTS | Room Lamp |
| BLANK | Not Used |
| DEFOG | Defogger |
| S/ROOF | Sunroof |
| ILLUM LAMPS | Illumination Relay |
| HORN | Horn |
| HEAD LAMPS | Headlamps |
| FUEL | Fuel Pump |

| Fuses | Usage |
|---|---|
| A/C | Air Conditioning Compressor |
| FOG LAMPS | Front Fog Lamp |
| HVAC BLOWER | Heating, Ventilation, Air Conditioning Blower |
| ABS | Anti-lock Brake System |
| I/P FUSE BATT. | Instrument Panel Fuse Box |
| COOL FAN | Radiator Fan |
| IGN 2 | Ignition 2 |
| BLANK | Blank |
| IGN 1 | Ignition 1 |
| PWR WNDW | Power Windows |
| SPARE | Spare |

| Relays | Usage |
|---|---|
| BLANK | Not Used |
| COOL FAN LOW | Cooling Fan Low |
| HEAD LAMPS HI | Headlamp High |
| HEAD LAMPS LOW | Headlamp Low |
| PWR WNDW | Power Window |
| FRT FOG | Fog Lamp |

| Relays | Usage |
|---|---|
| COOL FN CNTRL | Cooling Fan Control |
| FUEL PUMP | Fuel Pump |
| A/C COMPRSR | Air Conditioning Compressor |
| COOL FAN HI | Cooling Fan High |
| ILLUM LAMPS | Illumination Lamps |
| BLANK | Not Used |

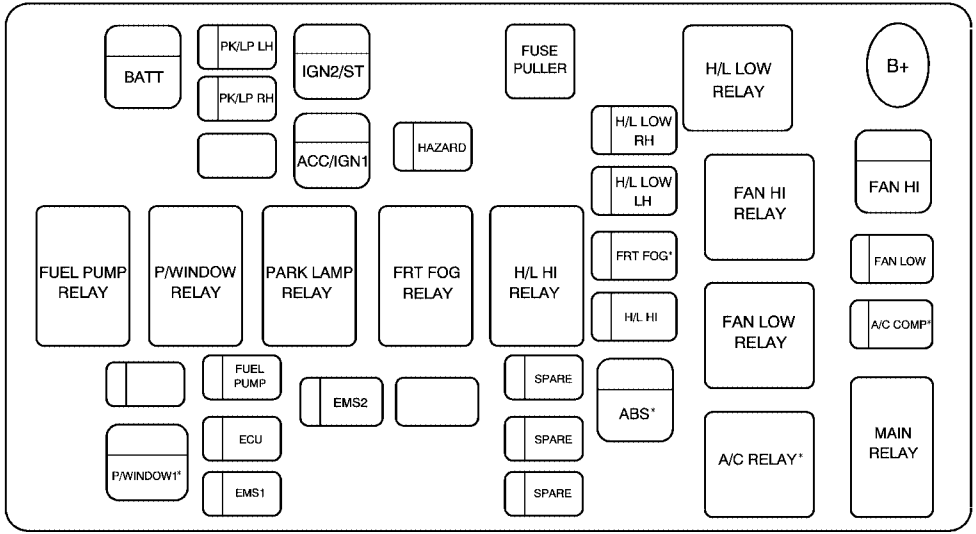


**Sedan**

| Fuses | Usage |
|---|---|
| BATT | Instrument Panel Fuse Block |
| PK/LP LH | Driver's Side Parking Lamp, Taillamp |

| Fuses | Usage |
|---|---|
| PK/LP RH | Passenger's Side Parking Lamp, Taillamp |
| IGN2/ST | Ignition Switch |

| Fuses | Usage |
|---|---|
| ACC/IGN1 | Ignition Switch |
| HAZARD | Hazard Lamps, Theft-Deterrent System |
| H/L LOW RH | Passenger's Side Low-Beam Headlamp |
| FAN HI | Cooling Fan High Speed |
| H/L LOW LH | Driver's Side Low-Beam Headlamp |
| FRT FOG | Front Fog Lamps (Option) |
| FAN LOW | Cooling Fan Low Speed |
| H/L HI | High-Beam Headlamps |
| A/C COMP | Air Conditioning Compressor (Option) |
| FUEL PUMP | Fuel Pump |

| Fuses | Usage |
|---|---|
| SPARE | Spare |
| ABS | Anti-lock Brake System (Option) |
| EMS2 | LEGR Valve, HO2S, EVAP Canister Purge Solenoid, CMP Sensor |
| P/WINDOW1 | Power Window Switch (Option) |
| ECU | Engine Control Module, Transaxle Control Module |
| SPARE | Spare |
| EMS1 | Engine Control Module, Injector, Cooling Fan, Air Conditioning Compressor |
| SPARE | Spare |

| Relays | Usage |
|---|---|
| H/L LOW RELAY | Low-Beam Headlamp Relay |
| FAN HI RELAY | Cooling Fan High Speed Relay |
| FUEL PUMP RELAY | Fuel Pump Relay |
| P/WINDOW RELAY | Power Window Relay |
| PARK LAMP RELAY | Parking Lamp Relay |
| FRT FOG RELAY | Front Fog Lamps Relay |

| Relays | Usage |
|---|---|
| H/L HI RELAY | High-Beam Headlamp Relay |
| FAN LOW RELAY | Cooling Fan Low Speed Relay |
| A/C RELAY | Air Conditioning Relay (Option) |
| MAIN RELAY | Main Relay |

| Misc. | Usage |
|---|---|
| FUSE PULLER | Fuse Puller |

# Capacities and Specifications

The following approximate capacities are given in English and metric conversions. See *Part D: Recommended Fluids and Lubricants on page 396* for more information.

| Application | Capacities | |
|---|---|---|
| | English | Metric |
| Air Conditioning Refrigerant R134a | For the air conditioning system refrigerant charge amount, see the refrigerant caution label located under the hood. See your dealer for more information. | |
| Cooling System | 6.3 qt | 6.0 L |
| Engine Oil with Filter | 3.96 qt | 3.75 L |
| Fuel Tank | 11.9 gal | 45.0 L |
| Transaxle, Automatic | 6.2 qt | 5.87 L |
| Transaxle, Manual | 1.9 qt | 1.8 L |
| Wheel Nut Torque | 81 lb ft | 110 N•m |
| All capacities are approximate. When adding, be sure to fill to the appropriate level, as recommended in this manual. Recheck fluid level after filling. | | |

## Engine Specifications

| Engine | VIN Code | Transaxle | Spark Plug Gap |
|---|---|---|---|
| 1.6L L4 (L91) | 6 | Automatic and Manual | 0.039-0.043 inch (1.0-1.1 mm) |

# Normal Maintenance Replacement Parts

Replacement parts identified below by name, part number, or specification can be obtained from your dealer.

**Normal Maintenance Replacement Parts**

| Part | GM Part Number | ACDelco® Part Number |
|---|---|---|
| Passenger Compartment Filter | 96539649 | — |
| Engine Air Cleaner/Filter | 96536694 | — |
| Engine Oil Filter | 96458873/96395221 | — |
| Fuel Filter | 96537170 | — |
| Spark Plugs | 96130723 | IFR6E11[1] |
| Windshield Wiper Blade- Hatchback | | |
| Driver's Side | 96497155 | — |
| Passenger's Side | 96619022 | — |
| Rear | 96301840 | — |
| Windshield Wiper Blade- Sedan | | |
| Driver's Side | 96648556 | — |
| Passenger's Side | 96648561 | — |
| [1]NGK | | |

# Engine Drive Belt Routing

## 1.6L L4 Engine

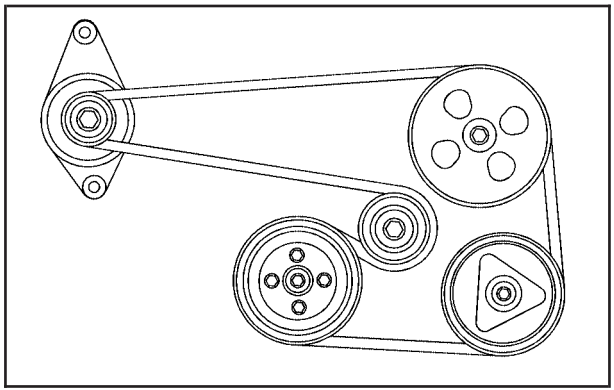

# Section 6 Maintenance Schedule

**Maintenance Schedule** ..... 372
Introduction ..... 372
Maintenance Requirements ..... 372
Your Vehicle and the Environment ..... 372
How This Section is Organized ..... 373
Part A: Scheduled Maintenance Services .... 374
Using the Maintenance Schedule ..... 374
Selecting the Right Schedule ..... 375
Short Trip/City Scheduled Maintenance ..... 377
Long Trip/Highway Scheduled Maintenance ..... 384
Part B: Owner Checks and Services ..... 389
At Each Fuel Fill ..... 389
At Least Once a Month ..... 389
At Least Twice a Year ..... 389
At Least Once a Year ..... 390
Part C: Periodic Maintenance Inspections .... 394
Steering, Suspension and Front Drive Axle Boot and Seal Inspection ..... 394
Exhaust System Inspection ..... 394
Fuel System Inspection ..... 395
Engine Cooling System Inspection ..... 395
Brake System Inspection ..... 395
Part D: Recommended Fluids and Lubricants ..... 396
Part E: Maintenance Record ..... 398

# Maintenance Schedule

## Introduction

**Important: Keep engine oil at the proper level and change as recommended.**

*Have you purchased the GM Protection Plan? The Plan supplements your new vehicle warranties. See your Warranty and Owner Assistance booklet or your dealer for details.*

## Maintenance Requirements

Maintenance intervals, checks, inspections and recommended fluids and lubricants as prescribed in this manual are necessary to keep your vehicle in good working condition. Any damage caused by failure to follow scheduled maintenance may not be covered by warranty.

## Your Vehicle and the Environment

Proper vehicle maintenance not only helps to keep your vehicle in good working condition, but also helps the environment. Improper vehicle maintenance can even affect the quality of the air we breathe. Improper fluid levels or the wrong tire inflation can increase the level of emissions from your vehicle. To help protect our environment, and to keep your vehicle in good condition, be sure to maintain your vehicle properly.

## How This Section is Organized

This maintenance schedule is divided into five parts:

**"Part A: Scheduled Maintenance Services"** explains what to have done and how often. Some of these services can be complex, so unless you are technically qualified and have the necessary equipment, you should let your GM dealer's service department do these jobs.

Your GM dealer has GM-trained and supported service people that will perform the work using genuine GM parts.

> **⚠ CAUTION:**
>
> **Performing maintenance work on a vehicle can be dangerous. In trying to do some jobs, you can be seriously injured. Do your own maintenance work only if you have the required know-how and the proper tools and equipment for the job. If you have any doubt, have a qualified technician do the work. See *Doing Your Own Service Work on page 265*.**

If you want to purchase service information, see *Service Publications Ordering Information on page 421*.

**"Part B: Owner Checks and Services"** tells you what should be checked and when. It also explains what you can easily do to help keep your vehicle in good condition.

**"Part C: Periodic Maintenance Inspections"** explains important inspections that your dealer's service department can perform for you.

**"Part D: Recommended Fluids and Lubricants"** lists some recommended products necessary to help keep your vehicle properly maintained. These products, or their equivalents, should be used whether you do the work yourself or have it done.

**"Part E: Maintenance Record"** is a place for you to record and keep track of the maintenance performed on your vehicle. Keep your maintenance receipts. They may be needed to qualify your vehicle for warranty repairs.

## Part A: Scheduled Maintenance Services

In this part are scheduled maintenance services which are to be performed at the mileage intervals specified.

## Using the Maintenance Schedule

We at General Motors want to keep your vehicle in good working condition. But we do not know exactly how you will drive it. You may drive short distances only a few times a week. Or you may drive long distances all the time in very hot, dusty weather. You may use your vehicle in making deliveries. Or you may drive it to work, to do errands, or in many other ways.

Because of the different ways people use their vehicles, maintenance needs may vary. You may need more frequent checks and replacements. So please read the following and note how you drive. If you have questions on how to keep your vehicle in good condition, see your dealer.

This part tells you the maintenance services you should have done and when to schedule them.

When you go to your dealer for your service needs, you will know that GM-trained and supported service people will perform the work using genuine GM parts.

The proper fluids and lubricants to use are listed in Part D. Make sure whoever services your vehicle uses these. All parts should be replaced and all necessary repairs done before you or anyone else drives the vehicle.

These schedules are for vehicles that:

- carry passengers and cargo within recommended limits. You will find these on the Tire and Loading Information label. See *Loading Your Vehicle on page 248*.
- are driven on reasonable road surfaces within legal driving limits.
- use the recommended fuel. See *Gasoline Octane on page 266*.

## Selecting the Right Schedule

First you will need to decide which of the two schedules is right for your vehicle. Here is how to decide which schedule to follow:

## Short Trip/City Definition

Follow the Short Trip/City Scheduled Maintenance if any one of these conditions is true for your vehicle:

- Most trips are less than 5 miles (8 km). This is particularly important when outside temperatures are below freezing.
- Most trips include extensive idling, such as frequent driving in stop-and-go traffic.
- If the vehicle is used for delivery service, police, taxi, or other commercial application.

*One of the reasons you should follow this schedule if you operate your vehicle under any of these conditions is that these conditions cause engine oil to break down sooner.*

## Short Trip/City Intervals

**Every 3,000 Miles (5 000 km):** Engine Oil and Filter Change (or 3 months, whichever occurs first).

**Every 6,000 Miles (10 000 km):** Tire Rotation.

**Every 15,000 Miles (25 000 km):** Engine Air Cleaner Filter Inspection. Passenger Compartment Air Filter Replacement. Drive Belt(s) Inspection.

**Every 30,000 Miles (50 000 km):** Engine Air Cleaner Filter Replacement. Spark Plug Replacement. EVAP System Service. PCV System Service. Timing Belt Inspection. Brake/Clutch Fluid Change (or 24 months, whichever occurs first).

**Every 42,000 Miles (70 000 km):** Engine Oil Pan Drain Plug Washer Replacement.

**Every 60,000 Miles (100 000 km):** Spark Plug Wire Replacement. Timing Belt Replacement. EVAP System Solenoid Valve Replacement.

**Every 90,000 Miles (150 000 km):** Fuel Filter Replacement.

**Every 150,000 Miles (240 000 km):** Cooling System Service.

*These intervals only summarize maintenance services. Be sure to follow the complete scheduled maintenance on the following pages.*

## Long Trip/Highway Definition

Follow this scheduled maintenance *only* if none of the conditions from the Short Trip/City Scheduled Maintenance are true. Do not use this schedule if the vehicle is driven in a dusty area or used off paved roads. Use the Short Trip/City schedule for these conditions.

*Driving a vehicle with a fully warmed engine under highway conditions will cause engine oil to break down slower.*

## Long Trip/Highway Intervals

**Every 7,500 Miles (12 500 km):** Engine Oil and Filter Change (or every 12 months, whichever occurs first). Tire Rotation.

**Every 15,000 Miles (25 000 km):** Engine Air Cleaner Filter Inspection. Passenger Compartment Air Filter Replacement. Drive Belt(s) Inspection.

**Every 30,000 Miles (50 000 km):** Engine Air Cleaner Filter Replacement. Spark Plug Replacement. EVAP System Service. PCV System Service. Timing Belt Inspection. Brake/Clutch Fluid Change (or 24 months, whichever occurs first).

**Every 60,000 Miles (100 000 km):** Spark Plug Wire Replacement. Timing Belt Replacement. EVAP System Solenoid Valve Replacement.

**Every 90,000 Miles (150 000 km):** Fuel Filter Replacement. Engine Oil Pan Drain Plug Washer Replacement.

**Every 150,000 Miles (240 000 km):** Cooling System Service.

*These intervals only summarize maintenance services. Be sure to follow the complete scheduled maintenance on the following pages.*

## Short Trip/City Scheduled Maintenance

The services shown in this schedule up to 100,000 miles (166 000 km) should be repeated after 100,000 miles (166 000 km) at the same intervals for the life of this vehicle. The services shown at 150,000 miles (240 000 km) should be repeated at the same interval after 150,000 miles (240 000 km) for the life of this vehicle.

See *Part B: Owner Checks and Services on page 389* and *Part C: Periodic Maintenance Inspections on page 394*.

### Footnotes

† *The U.S. Environmental Protection Agency or the California Air Resources Board has determined that the failure to perform this maintenance item will not nullify the emission warranty or limit recall liability prior to the completion of the vehicle's useful life. We, however, urge that all recommended maintenance services be performed at the indicated intervals and the maintenance be recorded.*

+ *A good time to check your brakes is during tire rotation. See Brake System Inspection on page 395*.

### 3,000 Miles (5 000 km)

- ❑ Change engine oil and filter (or every 3 months, whichever occurs first). *An Emission Control Service.*

### 6,000 Miles (10 000 km)

- ❑ Change engine oil and filter (or every 3 months, whichever occurs first). *An Emission Control Service.*
- ❑ Rotate tires. See *Tire Inspection and Rotation on page 327* for proper rotation pattern and additional information. *(See footnote +.)*

### 9,000 Miles (15 000 km)

- ❑ Change engine oil and filter (or every 3 months, whichever occurs first). *An Emission Control Service.*

### 12,000 Miles (20 000 km)

- ❑ Change engine oil and filter (or every 3 months, whichever occurs first). *An Emission Control Service.*
- ❑ Rotate tires. See *Tire Inspection and Rotation on page 327* for proper rotation pattern and additional information. *(See footnote +.)*

## 15,000 Miles (25 000 km)

- ❑ Change engine oil and filter (or every 3 months, whichever occurs first). *An Emission Control Service.*
- ❑ Replace passenger compartment air filter. If you drive regularly under dusty conditions, the filter may require replacement more often.
- ❑ Inspect engine air cleaner filter. If necessary, replace the filter. If vehicle is driven in dusty/dirty conditions, inspect filter at every engine oil change. See *Engine Air Cleaner/Filter on page 281* for more information.
- ❑ Inspect drive belt(s).

## 18,000 Miles (30 000 km)

- ❑ Change engine oil and filter (or every 3 months, whichever occurs first). *An Emission Control Service.*
- ❑ Rotate tires. See *Tire Inspection and Rotation on page 327* for proper rotation pattern and additional information. *(See footnote +.)*

## 21,000 Miles (35 000 km)

- ❑ Change engine oil and filter (or every 3 months, whichever occurs first). *An Emission Control Service.*

## 24,000 Miles (40 000 km)

- ❑ Change engine oil and filter (or every 3 months, whichever occurs first). *An Emission Control Service.*
- ❑ Rotate tires. See *Tire Inspection and Rotation on page 327* for proper rotation pattern and additional information. *(See footnote +)*

## 27,000 Miles (45 000 km)

- ❑ Change engine oil and filter (or every 3 months, whichever occurs first). *An Emission Control Service.*

## 30,000 Miles (50 000 km)

- ❑ Change engine oil and filter (or every 3 months, whichever occurs first). *An Emission Control Service.*
- ❑ Replace passenger compartment air filter. If you drive regularly under dusty conditions, the filter may require replacement more often.
- ❑ Replace engine air cleaner filter. See *Engine Air Cleaner/Filter on page 281* for more information.
- ❑ Rotate tires. See *Tire Inspection and Rotation on page 327* for proper rotation pattern and additional information. *(See footnote +.)*
- ❑ Replace spark plugs. *An Emission Control Service.*
- ❑ Inspect drive belt(s).
- ❑ Inspect timing belt.
- ❑ Inspect EVAP canister, vapor lines, and EVAP vent solenoid valve. *An Emission Control Service. (See footnote †.)*
- ❑ Inspect PCV system. *An Emission Control Service. (See footnote †.)*
- ❑ Change brake/clutch fluid (or every 24 months, whichever occurs first).

## 33,000 Miles (55 000 km)

- ❑ Change engine oil and filter (or every 3 months, whichever occurs first). *An Emission Control Service.*

## 36,000 Miles (60 000 km)

- ❑ Change engine oil and filter (or every 3 months, whichever occurs first). *An Emission Control Service.*
- ❑ Rotate tires. See *Tire Inspection and Rotation on page 327* for proper rotation pattern and additional information. *(See footnote +.)*

## 39,000 Miles (65 000 km)

- ❑ Change engine oil and filter (or every 3 months, whichever occurs first). *An Emission Control Service.*

## 42,000 Miles (70 000 km)

- ❑ Change engine oil and filter (or every 3 months, whichever occurs first). *An Emission Control Service.*
- ❑ Replace engine oil pan drain plug washer.
- ❑ Rotate tires. See *Tire Inspection and Rotation on page 327* for proper rotation pattern and additional information. *(See footnote +.)*

## 45,000 Miles (75 000 km)

- ❑ Change engine oil and filter (or every 3 months, whichever occurs first). *An Emission Control Service.*
- ❑ Replace passenger compartment air filter. If you drive regularly under dusty conditions, the filter may require replacement more often.
- ❑ Inspect engine air cleaner filter. If necessary, replace the filter. If vehicle is driven in dusty/dirty conditions, inspect filter at every engine oil change. See *Engine Air Cleaner/Filter on page 281* for more information.
- ❑ Inspect drive belt(s).

## 48,000 Miles (80 000 km)

- ❑ Change engine oil and filter (or every 3 months, whichever occurs first). *An Emission Control Service.*
- ❑ Rotate tires. See *Tire Inspection and Rotation on page 327* for proper rotation pattern and additional information. *(See footnote +.)*

## 51,000 Miles (85 000 km)

- ❑ Change engine oil and filter (or every 3 months, whichever occurs first). *An Emission Control Service.*

## 54,000 Miles (90 000 km)

- ❑ Change engine oil and filter (or every 3 months, whichever occurs first). *An Emission Control Service.*
- ❑ Rotate tires. See *Tire Inspection and Rotation on page 327* for proper rotation pattern and additional information. *(See footnote +.)*

## 57,000 Miles (95 000 km)

- ❑ Change engine oil and filter (or every 3 months, whichever occurs first). *An Emission Control Service.*

## 60,000 Miles (100 000 km)

- ❑ Change engine oil and filter (or every 3 months, whichever occurs first). *An Emission Control Service.*
- ❑ Replace passenger compartment air filter. If you drive regularly under dusty conditions, the filter may require replacement more often.
- ❑ Replace engine air cleaner filter. See *Engine Air Cleaner/Filter on page 281* for more information.
- ❑ Rotate tires. See *Tire Inspection and Rotation on page 327* for proper rotation pattern and additional information. *(See footnote +.)*
- ❑ Replace spark plugs. *An Emission Control Service.*
- ❑ Replace spark plug wires. *An Emission Control Service.*
- ❑ Inspect drive belt(s).
- ❑ Replace timing belt.
- ❑ Inspect EVAP canister and vapor lines. Replace EVAP vent solenoid valve. *An Emission Control Service. (See footnote †.)*
- ❑ Inspect PCV system. *An Emission Control Service. (See footnote †.)*
- ❑ Change brake/clutch fluid (or every 24 months, whichever occurs first).

## 63,000 Miles (105 000 km)

- ❑ Change engine oil and filter (or every 3 months, whichever occurs first). *An Emission Control Service.*

## 66,000 Miles (110 000 km)

- ❑ Change engine oil and filter (or every 3 months, whichever occurs first). *An Emission Control Service.*
- ❑ Rotate tires. See *Tire Inspection and Rotation on page 327* for proper rotation pattern and additional information. *(See footnote +.)*

## 69,000 Miles (115 000 km)

- ❑ Change engine oil and filter (or every 3 months, whichever occurs first). *An Emission Control Service.*

## 72,000 Miles (120 000 km)

- ❑ Change engine oil and filter (or every 3 months, whichever occurs first). *An Emission Control Service.*
- ❑ Rotate tires. See *Tire Inspection and Rotation on page 327* for proper rotation pattern and additional information. *(See footnote +.)*

## 75,000 Miles (125 000 km)

- ❑ Change engine oil and filter (or every 3 months, whichever occurs first). *An Emission Control Service.*
- ❑ Replace passenger compartment air filter. If you drive regularly under dusty conditions, the filter may require replacement more often.
- ❑ Inspect engine air cleaner filter. If necessary, replace the filter. If vehicle is driven in dusty/dirty conditions, inspect filter at every engine oil change. See *Engine Air Cleaner/Filter on page 281* for more information.
- ❑ Inspect drive belt(s).

## 78,000 Miles (130 000 km)

- ❑ Change engine oil and filter (or every 3 months, whichever occurs first). *An Emission Control Service.*
- ❑ Rotate tires. See *Tire Inspection and Rotation on page 327* for proper rotation pattern and additional information. *(See footnote +.)*

## 81,000 Miles (135 000 km)

- ❑ Change engine oil and filter (or every 3 months, whichever occurs first). *An Emission Control Service.*

## 84,000 Miles (140 000 km)

- ❑ Change engine oil and filter (or every 3 months, whichever occurs first). *An Emission Control Service.*
- ❑ Replace engine oil pan drain plug washer.
- ❑ Rotate tires. See *Tire Inspection and Rotation on page 327* for proper rotation pattern and additional information. *(See footnote +.)*

## 87,000 Miles (145 000 km)

- ❑ Change engine oil and filter (or every 3 months, whichever occurs first). *An Emission Control Service.*

## 90,000 Miles (150 000 km)

- ❑ Change engine oil and filter (or every 3 months, whichever occurs first). *An Emission Control Service.*
- ❑ Replace passenger compartment air filter. If you drive regularly under dusty conditions, the filter may require replacement more often.
- ❑ Replace engine air cleaner filter. See *Engine Air Cleaner/Filter on page 281* for more information.
- ❑ Rotate tires. See *Tire Inspection and Rotation on page 327* for proper rotation pattern and additional information. *(See footnote +.)*
- ❑ Replace spark plugs. *An Emission Control Service.*
- ❑ Replace fuel filter. *An Emission Control Service. (See footnote †.)*
- ❑ Inspect drive belt(s).
- ❑ Inspect timing belt.
- ❑ Inspect EVAP canister, vapor lines, and EVAP vent solenoid valve. *An Emission Control Service. (See footnote †.)*
- ❑ Inspect PCV system. *An Emission Control Service. (See footnote †.)*
- ❑ Change brake/clutch fluid (or every 24 months, whichever occurs first).

## 93,000 Miles (155 000 km)

- ❑ Change engine oil and filter (or every 3 months, whichever occurs first). *An Emission Control Service.*

## 96,000 Miles (160 000 km)

- ❑ Change engine oil and filter (or every 3 months, whichever occurs first). *An Emission Control Service.*
- ❑ Rotate tires. See *Tire Inspection and Rotation on page 327* for proper rotation pattern and additional information. *(See footnote +.)*

## 99,000 Miles (165 000 km)

- ❑ Change engine oil and filter (or every 3 months, whichever occurs first). *An Emission Control Service.*

## 150,000 Miles (240 000 km)

- ❑ Drain, flush, and refill cooling system. This service can be complex; you should have your dealer perform this service. See *Engine Coolant on page 287* for what to use. Inspect hoses. Clean radiator, condenser, pressure cap, and neck. Pressure test the cooling system and pressure cap. *An Emission Control Service.*

## Long Trip/Highway Scheduled Maintenance

The services shown in this schedule up to 100,000 miles (166 000 km) should be repeated after 100,000 miles (166 000 km) at the same intervals for the life of this vehicle. The services shown at 150,000 miles (240 000 km) should be repeated at the same interval after 150,000 miles (240 000 km) for the life of this vehicle.

See *Part B: Owner Checks and Services on page 389* and *Part C: Periodic Maintenance Inspections on page 394*.

### Footnotes

† *The U.S. Environmental Protection Agency or the California Air Resources Board has determined that the failure to perform this maintenance item will not nullify the emission warranty or limit recall liability prior to the completion of the vehicle's useful life. We, however, urge that all recommended maintenance services be performed at the indicated intervals and the maintenance be recorded.*

+ *A good time to check your brakes is during tire rotation. See Brake System Inspection on page 395*.

### 7,500 Miles (12 500 km)

- ❑ Change engine oil and filter (or every 12 months, whichever occurs first). *An Emission Control Service.*
- ❑ Rotate tires. See *Tire Inspection and Rotation on page 327* for proper rotation pattern and additional information. *(See footnote +.)*

### 15,000 Miles (25 000 km)

- ❑ Change engine oil and filter (or every 12 months, whichever occurs first). *An Emission Control Service.*
- ❑ Replace passenger compartment air filter. If you drive regularly under dusty conditions, the filter may require replacement more often.
- ❑ Inspect engine air cleaner filter. See *Engine Air Cleaner/Filter on page 281* for more information.
- ❑ Rotate tires. See *Tire Inspection and Rotation on page 327* for proper rotation pattern and additional information. *(See footnote +.)*
- ❑ Inspect drive belt(s).

## 22,500 Miles (37 500 km)

- ❑ Change engine oil and filter (or every 12 months, whichever occurs first). *An Emission Control Service.*
- ❑ Rotate tires. See *Tire Inspection and Rotation on page 327* for proper rotation pattern and additional information. *(See footnote +.)*

## 30,000 Miles (50 000 km)

- ❑ Change engine oil and filter (or every 12 months, whichever occurs first). *An Emission Control Service.*
- ❑ Replace passenger compartment air filter. If you drive regularly under dusty conditions, the filter may require replacement more often.
- ❑ Replace engine air cleaner filter. See *Engine Air Cleaner/Filter on page 281* for more information.
- ❑ Rotate tires. See *Tire Inspection and Rotation on page 327* for proper rotation pattern and additional information. *(See footnote +.)*
- ❑ Replace spark plugs. *An Emission Control Service.*
- ❑ Inspect drive belt(s).
- ❑ Inspect timing belt.
- ❑ Inspect EVAP canister, vapor lines, and EVAP vent solenoid valve. *An Emission Control Service. (See footnote †.)*
- ❑ Inspect PCV system. *An Emission Control Service. (See footnote †.)*
- ❑ Change brake/clutch fluid (or every 24 months, whichever occurs first).

## 37,500 Miles (62 500 km)

- ❑ Change engine oil and filter (or every 12 months, whichever occurs first). *An Emission Control Service.*
- ❑ Rotate tires. See *Tire Inspection and Rotation on page 327* for proper rotation pattern and additional information. *(See footnote +.)*

## 45,000 Miles (75 000 km)

- ❑ Change engine oil and filter (or every 12 months, whichever occurs first). *An Emission Control Service.*
- ❑ Replace passenger compartment air filter. If you drive regularly under dusty conditions, the filter may require replacement more often.
- ❑ Inspect engine air cleaner filter. See *Engine Air Cleaner/Filter on page 281* for more information.
- ❑ Rotate tires. See *Tire Inspection and Rotation on page 327* for proper rotation pattern and additional information. *(See footnote +.)*
- ❑ Inspect drive belt(s).

## 52,500 Miles (87 500 km)

- ❑ Change engine oil and filter (or every 12 months, whichever occurs first). *An Emission Control Service.*
- ❑ Rotate tires. See *Tire Inspection and Rotation on page 327* for proper rotation pattern and additional information. *(See footnote +.)*

## 60,000 Miles (100 000 km)

- ❑ Change engine oil and filter (or every 12 months, whichever occurs first). *An Emission Control Service.*
- ❑ Replace passenger compartment air filter. If you drive regularly under dusty conditions, the filter may require replacement more often.
- ❑ Replace engine air cleaner filter. See *Engine Air Cleaner/Filter on page 281* for more information.
- ❑ Rotate tires. See *Tire Inspection and Rotation on page 327* for proper rotation pattern and additional information. *(See footnote +.)*
- ❑ Replace spark plugs. *An Emission Control Service.*
- ❑ Replace spark plug wires. *An Emission Control Service.*
- ❑ Inspect drive belt(s).
- ❑ Replace timing belt.
- ❑ Inspect EVAP canister and vapor lines. Replace EVAP vent solenoid valve. *An Emission Control Service. (See footnote †.)*
- ❑ Inspect PCV system. *An Emission Control Service. (See footnote †.)*
- ❑ Change brake/clutch fluid (or every 24 months, whichever occurs first).

## 67,500 Miles (112 500 km)

- ❑ Change engine oil and filter (or every 12 months, whichever occurs first). *An Emission Control Service.*
- ❑ Rotate tires. See *Tire Inspection and Rotation on page 327* for proper rotation pattern and additional information. *(See footnote +.)*

## 75,000 Miles (125 000 km)

- ❑ Change engine oil and filter (or every 12 months, whichever occurs first). *An Emission Control Service.*
- ❑ Replace passenger compartment air filter. If you drive regularly under dusty conditions, the filter may require replacement more often.
- ❑ Inspect engine air cleaner filter. See *Engine Air Cleaner/Filter on page 281* for more information.
- ❑ Rotate tires. See *Tire Inspection and Rotation on page 327* for proper rotation pattern and additional information. *(See footnote +.)*
- ❑ Inspect drive belt(s).

## 82,500 Miles (137 500 km)

- ❑ Change engine oil and filter (or every 12 months, whichever occurs first). *An Emission Control Service.*
- ❑ Rotate tires. See *Tire Inspection and Rotation on page 327* for proper rotation pattern and additional information. *(See footnote +.)*

## 90,000 Miles (150 000 km)

- ❑ Change engine oil and filter (or every 12 months, whichever occurs first). *An Emission Control Service.*
- ❑ Replace engine oil pan drain plug washer.
- ❑ Replace passenger compartment air filter. If you drive regularly under dusty conditions, the filter may require replacement more often.
- ❑ Replace engine air cleaner filter. See *Engine Air Cleaner/Filter on page 281* for more information.
- ❑ Rotate tires. See *Tire Inspection and Rotation on page 327* for proper rotation pattern and additional information. *(See footnote +.)*
- ❑ Replace spark plugs. *An Emission Control Service.*

- ❑ Replace fuel filter. *An Emission Control Service. (See footnote †.)*
- ❑ Inspect drive belt(s).
- ❑ Inspect timing belt.
- ❑ Inspect EVAP canister, vapor lines and EVAP vent solenoid valve. *An Emission Control Service. (See footnote †.)*
- ❑ Inspect PCV system. *An Emission Control Service. (See footnote †.)*
- ❑ Change brake/clutch fluid (or every 24 months, whichever occurs first).

## 97,500 Miles (162 500 km)

- ❑ Change engine oil and filter (or every 12 months, whichever occurs first). *An Emission Control Service.*
- ❑ Rotate tires. See *Tire Inspection and Rotation on page 327* for proper rotation pattern and additional information. *(See footnote +.)*

## 150,000 Miles (240 000 km)

- ❑ Drain, flush, and refill cooling system. This service can be complex; you should have your dealer perform this service. See *Engine Coolant on page 287* for what to use. Inspect hoses. Clean radiator, condenser, pressure cap, and neck. Pressure test the cooling system and pressure cap. *An Emission Control Service.*

## Part B: Owner Checks and Services

Listed in this part are owner checks and services which should be performed at the intervals specified to help ensure the safety, dependability and emission control performance of your vehicle.

Be sure any necessary repairs are completed at once. Whenever any fluids or lubricants are added to your vehicle, make sure they are the proper ones, as shown in Part D.

## At Each Fuel Fill

*It is important for you or a service station attendant to perform these underhood checks at each fuel fill.*

### Engine Oil Level Check

Check the engine oil level and add the proper oil if necessary. See *Engine Oil on page 277* for further details.

### Engine Coolant Level Check

Check the engine coolant level and add the proper coolant mixture if necessary. See *Engine Coolant on page 287* for further details.

### Windshield Washer Fluid Level Check

Check the windshield washer fluid level in the windshield washer fluid reservoir and add the proper fluid if necessary. See *Windshield Washer Fluid on page 298* for further details.

## At Least Once a Month

### Tire Inflation Check

Visually inspect the tires and make sure the tires are inflated to the correct pressures. Do not forget to check the spare tire. See *Inflation - Tire Pressure on page 326*.

## At Least Twice a Year

### Restraint System Check

Make sure the safety belt reminder light and all your belts, buckles, latch plates, retractors and anchorages are working properly. Look for any other loose or damaged safety belt system parts. If you see anything that might keep a safety belt system from doing its job, have it repaired. Have any torn or frayed safety belts replaced.

Also look for any opened or broken airbag coverings, and have them repaired or replaced. (The airbag system does not need regular maintenance.)

### Wiper Blade Check

Inspect wiper blades for wear or cracking. Replace blade inserts that appear worn or damaged or that streak or miss areas of the windshield. Also see *Windshield and Wiper Blades on page 350*.

### Weatherstrip Lubrication

Silicone grease on weatherstrips will make them last longer, seal better, and not stick or squeak. Apply silicone grease with a clean cloth. During very cold, damp weather more frequent application may be required. See *Part D: Recommended Fluids and Lubricants on page 396*.

### Manual Transaxle Check

It is not necessary to check the transaxle fluid level. Check for leaks. A fluid leak is the only reason for fluid loss. Have the system inspected and repaired if needed.

### Automatic Transaxle Check

Check the transaxle fluid level; add if needed. See *Automatic Transaxle Fluid on page 283*. A fluid loss may indicate a problem. Check the system and repair if needed.

### Hydraulic Clutch System Check

Check the fluid level in the brake/clutch reservoir. See *Hydraulic Clutch on page 286*. A fluid loss in this system could indicate a problem. Have the system inspected and repaired at once.

## At Least Once a Year

### Key Lock Cylinders Service

Lubricate the key lock cylinders with the lubricant specified in Part D.

## Body Lubrication Service

Lubricate all hood latch assemblies, secondary latch, pivots, spring anchor, release pawl, hood and body door hinges, rear compartment, and any folding seat hardware. Part D tells you what to use. More frequent lubrication may be required when exposed to a corrosive environment.

## Starter Switch Check

**⚠ CAUTION:**

**When you are doing this inspection, the vehicle could move suddenly. If the vehicle moves, you or others could be injured.**

1. Before you start, be sure you have enough room around the vehicle.
2. Firmly apply both the parking brake and the regular brake. See *Parking Brake on page 117* if necessary.

   Do not use the accelerator pedal, and be ready to turn off the engine immediately if it starts.
3. On automatic transaxle vehicles, try to start the engine in each gear. The starter should work only in PARK (P) or NEUTRAL (N). If the starter works in any other position, your vehicle needs service.

   On manual transaxle vehicles, put the shift lever in NEUTRAL, push the clutch pedal down halfway and try to start the engine. The starter should work only when the clutch pedal is pushed down all the way to the floor. If the starter works when the clutch pedal is not pushed all the way down, your vehicle needs service.

## Automatic Transaxle Shift Lock Control System Check

**⚠ CAUTION:**

**When you are doing this inspection, the vehicle could move suddenly. If the vehicle moves, you or others could be injured.**

1. Before you start, be sure you have enough room around the vehicle. It should be parked on a level surface.
2. Firmly apply the parking brake. See *Parking Brake on page 117* if necessary.

   Be ready to apply the regular brake immediately if the vehicle begins to move.
3. With the engine off, turn the ignition to ON, but do not start the engine. Without applying the regular brake, try to move the shift lever out of PARK (P) with normal effort. If the shift lever moves out of PARK (P), your vehicle needs service.

## Ignition Transaxle Lock Check

While parked, and with the parking brake set, try to turn the ignition to LOCK in each shift lever position.

- With an automatic transaxle, the ignition should turn to LOCK only when the shift lever is in PARK (P).
- With a manual transaxle, the ignition should turn to LOCK only when you press the key release button.

On all vehicles, the ignition key should come out only in LOCK.

Turn the steering wheel to the left and to the right. It should only lock when turned to the right.

## Parking Brake and Automatic Transaxle Park (P) Mechanism Check

**⚠ CAUTION:**

**When you are doing this check, your vehicle could begin to move. You or others could be injured and property could be damaged. Make sure there is room in front of your vehicle in case it begins to roll. Be ready to apply the regular brake at once should the vehicle begin to move.**

Park on a fairly steep hill, with the vehicle facing downhill. Keeping your foot on the regular brake, set the parking brake.

- To check the parking brake's holding ability: With the engine running and transaxle in NEUTRAL (N), slowly remove foot pressure from the regular brake pedal. Do this until the vehicle is held by the parking brake only.
- To check the PARK (P) mechanism's holding ability: With the engine running, shift to PARK (P). Then release the parking brake followed by the regular brake.

## Underbody Flushing Service

At least every spring, use plain water to flush any corrosive materials from the underbody. Take care to clean thoroughly any areas where mud and other debris can collect.

## Part C: Periodic Maintenance Inspections

Listed in this part are inspections and services which should be performed at least twice a year (for instance, each spring and fall). *You should let your dealer's service department do these jobs. Make sure any necessary repairs are completed at once.*

Proper procedures to perform these services may be found in a service manual. See *Service Publications Ordering Information on page 421*.

## Steering, Suspension and Front Drive Axle Boot and Seal Inspection

Inspect the front and rear suspension and steering system for damaged, loose or missing parts, signs of wear or lack of lubrication. Inspect the power steering lines and hoses for proper hook-up, binding, leaks, cracks, chafing, etc. Clean and then inspect the drive axle boot seals for damage, tears or leakage. Replace seals if necessary.

## Exhaust System Inspection

Inspect the complete exhaust system. Inspect the body near the exhaust system. Look for broken, damaged, missing or out-of-position parts as well as open seams, holes, loose connections or other conditions which could cause a heat build-up in the floor pan or could let exhaust fumes into the vehicle. See *Engine Exhaust on page 122*.

## Fuel System Inspection

Inspect the complete fuel system for damage or leaks.

## Engine Cooling System Inspection

Inspect the hoses and have them replaced if they are cracked, swollen or deteriorated. Inspect all pipes, fittings and clamps; replace as needed. Clean the outside of the radiator and air conditioning condenser. To help ensure proper operation, a pressure test of the cooling system and pressure cap is recommended at least once a year.

## Brake System Inspection

Inspect the complete system. Inspect brake lines and hoses for proper hook-up, binding, leaks, cracks, chafing, etc. Inspect disc brake pads for wear and rotors for surface condition. Also inspect drum brake linings for wear and cracks. Inspect other brake parts, including drums, wheel cylinders, calipers, parking brake, etc. Check parking brake adjustment. You may need to have your brakes inspected more often if your driving habits or conditions result in frequent braking.

## Part D: Recommended Fluids and Lubricants

Fluids and lubricants identified below by name, part number, or specification may be obtained from your dealer.

| Usage | Fluid/Lubricant |
|---|---|
| Engine Oil | Engine oil which meets GM Standard GM6094M and displays the American Petroleum Institute Certified for Gasoline Engines starburst symbol. GM Goodwrench® oil meets all the requirements for your vehicle. To determine the proper viscosity for your vehicle's engine, see *Engine Oil on page 277*. |
| Engine Coolant | 50/50 mixture of clean, drinkable water and use only DEX-COOL® Coolant. See *Engine Coolant on page 287* |
| Hydraulic Brake System | Delco® Supreme 11 Brake Fluid or equivalent DOT-3 brake fluid. |
| Windshield Washer Solvent | GM Optikleen® Washer Solvent. |
| Power Steering System | DEXRON®-VI Automatic Transmission Fluid. |
| Automatic Transaxle | Use only T-IV Automatic Transmission Fluid (GM Part No. U.S. 88900925, in Canada 22689186). See *Automatic Transaxle Fluid on page 283*. |
| Manual Transaxle | Manual Transmission Fluid (GM Part No. U.S. 89021806, in Canada 89021807). |

| Usage | Fluid/Lubricant |
|---|---|
| Key Lock Cylinders | Multi-Purpose Lubricant, Superlube (GM Part No. U.S. 12346241, in Canada 10953474). |
| Manual Transaxle Shift Linkage | Chassis Lubricant (GM Part No. U.S. 12377985, in Canada 88901242) or lubricant meeting requirements of NLGI #2, Category LB or GC-LB. |
| Chassis Lubrication | Chassis Lubricant (GM Part No. U.S. 12377985, in Canada 88901242) or lubricant meeting requirements of NLGI #2, Category LB or GC-LB. |

| Usage | Fluid/Lubricant |
|---|---|
| Hood Latch Assembly, Secondary Latch, Pivots, Spring Anchor, and Release Pawl | Lubriplate Lubricant Aerosol (GM Part No. U.S. 12346293, in Canada 992723) or lubricant meeting requirements of NLGI #2, Category LB or GC-LB. |
| Hood and Door Hinges | Multi-Purpose Lubricant, Superlube (GM Part No. U.S. 12346241, in Canada 10953474). |
| Weatherstrip Conditioning | Weatherstrip Lubricant (GM Part No. U.S. 3634770, in Canada 10953518) or Dielectric Silicone Grease (GM Part No. U.S. 12345579, in Canada 992887). |

## Part E: Maintenance Record

After the scheduled services are performed, record the date, odometer reading, and who performed the service and any additional information from “Owner Checks and Services” or “Periodic Maintenance” on the following record pages. Also, you should retain all maintenance receipts.

### Maintenance Record

| Date | Odometer Reading | Serviced By | Maintenance Record |
|---|---|---|---|
| | | | |
| | | | |
| | | | |
| | | | |
| | | | |
| | | | |
| | | | |
| | | | |

## Maintenance Record (cont'd)

| Date | Odometer Reading | Serviced By | Maintenance Record |
|---|---|---|---|
| | | | |
| | | | |
| | | | |
| | | | |
| | | | |
| | | | |
| | | | |
| | | | |
| | | | |
| | | | |

## Maintenance Record (cont'd)

| Date | Odometer Reading | Serviced By | Maintenance Record |
|---|---|---|---|
| | | | |
| | | | |
| | | | |
| | | | |
| | | | |
| | | | |
| | | | |
| | | | |
| | | | |
| | | | |

# Section 7 Customer Assistance Information

**Customer Assistance and Information** ..... 402
Customer Satisfaction Procedure ..... 402
Online Owner Center ..... 405
Customer Assistance for Text Telephone (TTY) Users ..... 406
Customer Assistance Offices ..... 406
GM Mobility Reimbursement Program ..... 407
Roadside Assistance Program ..... 408
Courtesy Transportation ..... 411
Vehicle Data Collection and Event Data Recorders ..... 414
Collision Damage Repair ..... 415
**Reporting Safety Defects** ..... 419
Reporting Safety Defects to the United States Government ..... 419
Reporting Safety Defects to the Canadian Government ..... 420
Reporting Safety Defects to General Motors ..... 420
Service Publications Ordering Information ..... 421

# Customer Assistance and Information

## Customer Satisfaction Procedure

Your satisfaction and goodwill are important to your dealer and to Chevrolet. Normally, any concerns with the sales transaction or the operation of your vehicle will be resolved by your dealer's sales or service departments. Sometimes, however, despite the best intentions of all concerned, misunderstandings can occur. If your concern has not been resolved to your satisfaction, the following steps should be taken:

**STEP ONE:** Discuss your concern with a member of dealership management. Normally, concerns can be quickly resolved at that level. If the matter has already been reviewed with the sales, service, or parts manager, contact the owner of the dealership or the general manager.

**STEP TWO:** If after contacting a member of dealership management, it appears your concern cannot be resolved by the dealership without further help, in the U.S., contact the Chevrolet Customer Assistance Center by calling 1-800-222-1020. In Canada, contact General Motors of Canada Customer Communication Centre by calling 1-800-263-3777 (English) or 1-800-263-7854 (French).

We encourage you to call the toll-free number in order to give your inquiry prompt attention. Please have the following information available to give the Customer Assistance Representative:

- Vehicle Identification Number (VIN). This is available from the vehicle registration or title, or the plate at the top left of the instrument panel and visible through the windshield.
- Dealership name and location.
- Vehicle delivery date and present mileage (kilometers).

When contacting Chevrolet, please remember that your concern will likely be resolved at a dealer's facility. That is why we suggest you follow Step One first if you have a concern.

**STEP THREE — U.S. Owners:** Both General Motors and your dealer are committed to making sure you are completely satisfied with your new vehicle. However, if you continue to remain unsatisfied after following the procedure outlined in Steps 1 and 2, you should file with the BBB Auto Line Program to enforce your rights.

The BBB Auto Line Program is an out of court program administered by the Council of Better Business Bureaus to settle automotive disputes regarding vehicle repairs or the interpretation of the New Vehicle Limited Warranty. Although you may be required to resort to this informal dispute resolution program prior to filing a court action, use of the program is free of charge and your case will generally be heard within 40 days. If you do not agree with the decision given in your case, you may reject it and proceed with any other venue for relief available to you.

You may contact the BBB Auto Line Program using the toll-free telephone number or write them at the following address:

BBB Auto Line Program
Council of Better Business Bureaus, Inc.
4200 Wilson Boulevard
Suite 800
Arlington, VA 22203-1838

Telephone: 1-800-955-5100

This program is available in all 50 states and the District of Columbia. Eligibility is limited by vehicle age, mileage, and other factors. General Motors reserves the right to change eligibility limitations and/or discontinue its participation in this program.

**STEP THREE — Canadian Owners:** In the event that you do not feel your concerns have been addressed after following the procedure outlined in Steps 1 and 2, General Motors of Canada Limited wants you to be aware of its participation in a no-charge Mediation/Arbitration Program. General Motors of Canada Limited has committed to binding arbitration of owner disputes involving factory-related vehicle service claims. The program provides for the review of the facts involved by an impartial third party arbiter, and may include an informal hearing before the arbiter. The program is designed so that the entire dispute settlement process, from the time you file your complaint to the final decision, should be completed in approximately 70 days. We believe our impartial program offers advantages over courts in most jurisdictions because it is informal, quick, and free of charge.

For further information concerning eligibility in the Canadian Motor Vehicle Arbitration Plan (CAMVAP), call toll-free 1-800-207-0685. Alternatively, you may call the General Motors Customer Communication Centre, 1-800-263-3777 (English), 1-800-263-7854 (French), or you may write to:

The Mediation/Arbitration Program
c/o Customer Communication Centre
General Motors of Canada Limited
Mail Code: CA1-163-005
1908 Colonel Sam Drive
Oshawa, Ontario L1H 8P7

Your inquiry should be accompanied by your Vehicle Identification Number (VIN).

# Online Owner Center

## Online Owner Center (United States only)

The Owner Center is a resource for your GM ownership needs. Specific vehicle information can be found in one place.

**The Online Owner Center allows you to:**

- Get e-mail service reminders.
- Access information about your specific vehicle, including tips and videos and an electronic version of this owner manual.
- Keep track of your vehicle's service history and maintenance schedule.
- Find GM dealers for service nationwide.
- Receive special promotions and privileges only available to members.

Refer to www.MyGMLink.com on the web for updated information and to register your vehicle.

## My GM Canada (Canada only)

My GM Canada is a password-protected section of gmcanada.com where you can save information on GM vehicles, get personalized offers, and use handy tools and forms with greater ease.

Here are a few of the valuable tools and services you will have access to:

- My Showroom: Find and save information on vehicles and current offers in your area.
- My Dealers/Retailers: Save details such as address and phone number for each of your preferred GM Dealers or Retailers.
- My Driveway: Receive service reminders and helpful advice on owning and maintaining your vehicle.
- My Preferences: Manage your profile, subscribe to E-News and use tools and forms with greater ease.

To sign up to My GM Canada, visit the My GM Canada section within www.gmcanada.com.

## Customer Assistance for Text Telephone (TTY) Users

To assist customers who are deaf, hard of hearing, or speech-impaired and who use Text Telephones (TTYs), Chevrolet has TTY equipment available at its Customer Assistance Center. Any TTY user can communicate with Chevrolet by dialing:
1-800-833-CHEV (2438). (TTY users in Canada can dial 1-800-263-3830.)

## Customer Assistance Offices

Chevrolet encourages customers to call the toll-free number for assistance. However, if a customer wishes to write or e-mail Chevrolet, the letter should be addressed to:

### United States — Customer Assistance

Chevrolet Motor Division
Chevrolet Customer Assistance Center
P.O. Box 33170
Detroit, MI 48232-5170

www.Chevrolet.com
1-800-222-1020
1-800-833-2438 (For Text Telephone devices (TTYs))
Roadside Assistance: 1-800-CHEV-USA (243-8872)
Fax Number: 313-381-0022

From Puerto Rico:
1-800-496-9992 (English)
1-800-496-9993 (Spanish)
Fax Number: 313-381-0022

From U.S. Virgin Islands:
1-800-496-9994
Fax Number: 313-381-0022

### Canada — Customer Assistance

General Motors of Canada Limited
Customer Communication Centre, CA1-163-005
1908 Colonel Sam Drive
Oshawa, Ontario L1H 8P7

www.gmcanada.com
1-800-263-3777 (English)
1-800-263-7854 (French)
1-800-263-3830 (For Text Telephone devices (TTYs))
Roadside Assistance: 1-800-268-6800

## Overseas — Customer Assistance

Please contact the local General Motors Business Unit.

## Mexico, Central America and Caribbean Islands/Countries (Except Puerto Rico and U.S. Virgin Islands) — Customer Assistance

General Motors de Mexico, S. de R.L. de C.V.
Customer Assistance Center
Paseo de la Reforma # 2740
Col. Lomas de Bezares
C.P. 11910, Mexico, D.F.
01-800-508-0000
Long Distance: 011-52-53 29 0 800

## GM Mobility Reimbursement Program

GM MOBILITY℠

This program, available to qualified applicants, can reimburse you up to $1,000 of the cost of eligible aftermarket adaptive equipment required for your vehicle, such as hand controls or a wheelchair/scooter lift.

The offer is available for a very limited period of time from the date of vehicle purchase/lease. For more details, or to determine your vehicle's eligibility, visit gmmobility.com or call the GM Mobility Assistance Center at 1-800-323-9935. Text telephone (TTY) users, call 1-800-833-9935.

General Motors of Canada also has a Mobility Program. Call 1-800-GM-DRIVE (463-7483) for details. TTY users call 1-800-263-3830.

## Roadside Assistance Program

In the U.S., call **1-800-CHEV-USA (1-800-243-8872)**

In Canada, call **1-800-268-6800**

Service available 24 hours a day, 365 days a year.

As the owner of a new Chevrolet vehicle, you are automatically enrolled in the Chevrolet Roadside Assistance program. This value-added service is intended to provide you with peace of mind as you drive in the city or travel the open road.

### Who is Covered?

Roadside Assistance coverage is for the vehicle operator, regardless of ownership. A person driving this vehicle without the consent of the owner is not eligible for coverage.

The following services are provided in the U.S. during the Bumper-to-Bumper warranty period and, in Canada, during the Base Warranty coverage period of the New Vehicle Limited Warranty, up to a maximum coverage of $100.

- **Fuel Delivery:** Delivery of enough fuel for the customer to get to the nearest service station (approximately $5 in the U.S. and 10 litres in Canada). Service to provide diesel may be restricted. For safety reasons, propane and other alternative fuels will not be provided through this service.
- **Lock-out Service:** To ensure security, the driver must present the vehicle registration and personal ID before lock-out service is provided. Lock-out service will be covered at no charge if you are unable to gain entry into your vehicle. If your vehicle will not start, Roadside Assistance will arrange to have your vehicle towed to the nearest authorized dealership. In the U.S., replacement keys made at the customer's expense will be covered within 10 miles (16 km).

- **Emergency Tow From a Public Roadway or Highway:** Tow to the nearest dealership for warranty service or in the event of a vehicle-disabling accident. Winch-out assistance when the vehicle is mired in sand, mud, or snow.
- **Flat Tire Change:** If your vehicle has a spare tire, installation of the tire in good condition will be covered at no charge. The customer is responsible for the repair or replacement of the tire if not covered by a warrantable failure.
- **Jump Start:** No-start occurrences which require a battery jump start will be covered at no charge.

## Additional Services for Canadian Customers

- **Trip Routing Service:** Upon Request, Roadside Assistance will send you detailed, computer-personalized maps, highlighting your choice of either the most direct route or the most scenic route to your destination, anywhere in North America, along with any helpful travel information we may have pertaining to your trip. To request this service, please call us toll-free at 1-800-268-6800.

  We will make every attempt to send your personalized trip routing as quickly as possible, but it is best to allow three weeks before your planned departure date. Trip routing requests will be limited to six per calendar year.

- **Trip Interruption Benefits and Assistance:** In the event of a warranty related vehicle disablement, while en route and over 250 kilometres from original point of departure, you may qualify for trip interruption expense assistance. This assistance covers reasonable reimbursement of up to a maximum of $500 (Canadian) for (A) meals (maximum of $50/day), (B) lodging (maximum of $100/night) and (C) alternate ground transportation (maximum of $40/day). This benefit is to assist you with some of the unplanned expense you may incur while waiting for your vehicle to be repaired.

  Pre-authorization, original detailed receipts and a copy of the repair order are required.

  Once authorization has been given, your advisor will help you make any necessary arrangements and explain how to claim for trip interruption expense assistance.
- **Alternative Service:** There may be times, when Roadside Assistance cannot provide timely assistance, your advisor may authorize you to secure local emergency road service, and you will be reimbursed up to $100 upon submission of the original receipt to Roadside Assistance.

In many instances, mechanical failures are covered under Chevrolet's Bumper-to-Bumper warranty, and the duration of the Base Warranty Coverage for Canadian customers of the new Vehicle Limited Warranty. However, any cost for parts and labor for non-warranty repairs are the responsibility of the driver.

For prompt and efficient assistance when calling, please provide the following to the Roadside Assistance Representative:

- Your name, home address, and home telephone number.
- Telephone number of your location.
- Location of the vehicle.
- Model, year, color, and license plate number.
- Odometer reading, Vehicle Identification Number (VIN), and delivery date of the vehicle.
- Description of the problem.

While we hope you never have the occasion to use our service, it is added security while traveling for you and your family. Remember, we are only a phone call away. U.S. customers call Chevrolet Roadside Assistance: **1-800-CHEV-USA (1-800-243-8872)**, text telephone (TTY) users, call **1-888-889-2438**, Canadian customers call **1-800-268-6800**.

Chevrolet and General Motors of Canada Limited reserve the right to limit services or reimbursement to an owner or driver when, in their sole discretion, the claims become excessive in frequency or type of occurrence.

Roadside Assistance is not part of or included in the coverage provided by the New Vehicle Limited Warranty. Chevrolet and General Motors of Canada Limited reserve the right to make any changes or discontinue the Roadside Assistance program at any time without notification.

### Towing and Road Service Exclusions

Specifically excluded from Roadside Assistance coverage are towing or services for vehicles operated on a non-public roadway or highway, fines, impound towing caused by a violation of local, Municipal, State, Provincial, or Federal law, and mounting, dismounting or changing of snow tires, chains, or other traction devices.

## Courtesy Transportation

To enhance your ownership experience, we and our participating dealers are proud to offer Courtesy Transportation, a customer support program for new vehicles.

For warranty repairs during the Bumper-to-Bumper (U.S.) or Base Warranty Coverage period (Canada), provided by the New Vehicle Limited Warranty, interim transportation may be available under the Courtesy Transportation program. Several courtesy transportation options are available to assist in reducing your inconvenience when warranty repairs are required.

Courtesy Transportation is not a part of the New Vehicle Limited Warranty and is available only at participating dealers. A separate booklet entitled “Warranty and Owner Assistance Information” furnished with each new vehicle provides detailed warranty coverage information.

## Scheduling Service Appointments

When your vehicle requires warranty service, you should contact your dealer and request an appointment. By scheduling a service appointment and advising your service consultant of your transportation needs, your dealer can help minimize your inconvenience.

If your vehicle cannot be scheduled into the service department immediately, keep driving it until it can be scheduled for service, unless, of course, the problem is safety-related. If it is, please call your dealership, let them know this, and ask for instructions.

If the dealer requests that you simply drop the vehicle off for service, you are urged to do so as early in the work day as possible to allow for the same day repair.

## Transportation Options

Warranty service can generally be completed while you wait. However, if you are unable to wait, GM helps to minimize your inconvenience by providing several transportation options. Depending on the circumstances, your dealer can offer you one of the following:

### Shuttle Service

Shuttle service is the preferred means of offering Courtesy Transportation and participating dealers can provide you with shuttle service to get you to your destination with minimal interruption of your daily schedule. This includes one-way or round trip shuttle service within reasonable time and distance parameters for the dealer's area.

### Public Transportation or Fuel Reimbursement

If your vehicle requires overnight warranty repairs, and public transportation is used as 'shuttle service,' the reimbursement is limited to the associated shuttle allowance and must be supported by original receipts. In addition, for U.S. customers, should you arrange transportation through a friend or relative, limited reimbursement for reasonable fuel expenses may be available. Claim amounts should reflect actual costs and be supported by original receipts.

### Courtesy Rental Vehicle

Your dealer may arrange to provide you with a courtesy rental vehicle or reimburse you for a rental vehicle that you obtain if your vehicle is kept for an overnight warranty repair. Rental reimbursement will be limited and must be supported by original receipts. This requires that you sign and complete a rental agreement and meet state/provincial, local, and rental vehicle provider requirements. Requirements vary and may include minimum age requirements, insurance coverage, credit card, etc. You are responsible for fuel usage charges and may also be responsible for taxes, levies, usage fees, excessive mileage, or rental usage beyond the completion of the repair.

Generally it is not possible to provide a like-vehicle as a courtesy rental.

## Additional Program Information

All program options, such as shuttle service, may not be available at every dealer. Please contact your dealer for specific information about availability. All Courtesy Transportation arrangements will be administered by appropriate dealer personnel.

*General Motors reserves the right to unilaterally modify, change or discontinue Courtesy Transportation at any time and to resolve all questions of claim eligibility pursuant to the terms and conditions described herein at its sole discretion.*

## Vehicle Data Collection and Event Data Recorders

Your vehicle, like other modern motor vehicles, has a number of sophisticated computer systems that monitor and control several aspects of the vehicle's performance. Your vehicle uses on-board vehicle computers to monitor emission control components to optimize fuel economy, to monitor conditions for airbag deployment and, if the vehicle has the Anti-lock Brake System (ABS), to provide anti-lock braking and to help the driver control the vehicle in difficult driving situations. Some information may be stored during regular operations to facilitate repair of detected malfunctions; other information is stored only in a crash event by computer systems, such as those commonly called Event Data Recorders (EDR).

In a crash event, computer systems, such as the airbag Sensing and Diagnostic Module (SDM) in your vehicle may record information about the condition of the vehicle and how it was operated, such as data related to engine speed, brake application, throttle position, vehicle speed, safety belt usage, airbag readiness, airbag performance, and the severity of a collision.

This information has been used to improve vehicle crash performance and may be used to improve crash performance of future vehicles and driving safety. Unlike the data recorders on many airplanes, these on-board systems do not record sounds, such as conversation of vehicle occupants.

To read this information, special equipment is needed and access to the vehicle or the device that stores the data is required. GM will not access information about a crash event or share it with others other than:

- with the consent of the vehicle owner or, if the vehicle is leased, with the consent of the lessee,
- in response to an official request of police or similar government office,
- as part of GM's defense of litigation through the discovery process, or
- as required by law.

In addition, once GM collects or receives data, GM may:

- use the data for GM research needs,
- make it available for research where appropriate confidentiality is to be maintained and need is shown, or
- share summary data which is not tied to a specific vehicle with non-GM organizations for research purposes.

Others, such as law enforcement, may have access to the special equipment that can read the information if they have access to the vehicle or the device that stores the data.

If your vehicle has OnStar®, please check the OnStar® subscription service agreement or manual for information on its operations and data collection.

## Collision Damage Repair

If your vehicle is involved in a collision and it is damaged, have the damage repaired by a qualified technician using the proper equipment and quality replacement parts. Poorly performed collision repairs will diminish your vehicle's resale value, and safety performance can be compromised in subsequent collisions.

### Collision Parts

Genuine GM Collision parts are new parts made with the same materials and construction methods as the parts with which your vehicle was originally built. Genuine GM Collision parts are your best choice to assure that your vehicle's designed appearance, durability, and safety are preserved. The use of Genuine GM parts can help maintain your GM New Vehicle Warranty.

Recycled original equipment parts may also be used for repair. These parts are typically removed from vehicles that were total losses in prior accidents. In most cases, the parts being recycled are from undamaged sections of the vehicle. A recycled original equipment GM part, may be an acceptable choice to maintain your vehicle's originally designed appearance and safety performance, however, the history of these parts is not known. Such parts are not covered by your GM New Vehicle Limited Warranty, and any related failures are not covered by that warranty.

Aftermarket collision parts are also available. These are made by companies other than GM and may not have been tested for your vehicle. As a result, these parts may fit poorly, exhibit premature durability/corrosion problems, and may not perform properly in subsequent collisions. Aftermarket parts are not covered by your GM New Vehicle Limited Warranty, and any vehicle failure related to such parts are not covered by that warranty.

## Repair Facility

GM also recommends that you choose a collision repair facility that meets your needs before you ever need collision repairs. Your GM dealer may have a collision repair center with GM-trained technicians and state of the art equipment, or be able to recommend a collision repair center that has GM-trained technicians and comparable equipment.

## Insuring Your Vehicle

Protect your investment in your GM vehicle with comprehensive and collision insurance coverage. There are significant differences in the quality of coverage afforded by various insurance policy terms. Many insurance policies provide reduced protection to your GM vehicle by limiting compensation for damage repairs by using aftermarket collision parts. Some insurance companies will not specify aftermarket collision parts. When purchasing insurance, we recommend that you assure your vehicle will be repaired with GM original equipment collision parts. If such insurance coverage is not available from your current insurance carrier, consider switching to another insurance carrier.

If your vehicle is leased, the leasing company may require you to have insurance that assures repairs with Genuine GM Original Equipment Manufacturer (OEM) parts or Genuine Manufacturer replacement parts. Read your lease carefully, as you may be charged at the end of your lease for poor quality repairs.

## If an Accident Occurs

Here is what to do if you are involved in an accident.

- Try to relax and then check to make sure you are all right. If you are uninjured, make sure that no one else in your vehicle, or the other vehicle, is injured.
- If there has been an injury, call 911 for help. Do not leave the scene of an accident until all matters have been taken care of. Move your vehicle only if its position puts you in danger or you are instructed to move it by a police officer.
- Give only the necessary and requested information to police and other parties involved in the accident. Do not discuss your personal condition, mental frame of mind, or anything unrelated to the accident. This will help guard against post-accident legal action.
- If you need roadside assistance, call GM Roadside Assistance. See *Roadside Assistance Program on page 408* for more information.
- If your vehicle cannot be driven, know where the towing service will be taking it. Get a card from the tow truck operator or write down the driver's name, the service's name, and the phone number.
- Remove any valuables from your vehicle before it is towed away. Make sure this includes your insurance information and registration if you keep these items in your vehicle.

- Gather the important information you will need from the other driver. Things like name, address, phone number, driver's license number, vehicle license plate, vehicle make, model and model year, Vehicle Identification Number (VIN), insurance company and policy number, and a general description of the damage to the other vehicle.
- If possible, call your insurance company from the scene of the accident. They will walk you through the information they will need. If they ask for a police report, phone or go to the police department headquarters the next day and you can get a copy of the report for a nominal fee. In some states/provinces with "no fault" insurance laws, a report may not be necessary. This is especially true if there are no injuries and both vehicles are driveable.
- Choose a reputable collision repair facility for your vehicle. Whether you select a GM dealer or a private collision repair facility to fix the damage, make sure you are comfortable with them. Remember, you will have to feel comfortable with their work for a long time.
- Once you have an estimate, read it carefully and make sure you understand what work will be performed on your vehicle. If you have a question, ask for an explanation. Reputable shops welcome this opportunity.

### Managing the Vehicle Damage Repair Process

In the event that your vehicle requires damage repairs, GM recommends that you take an active role in its repair. If you have a pre-determined repair facility of choice, take your vehicle there, or have it towed there. Specify to the facility that any required replacement collision parts be original equipment parts, either new Genuine GM parts or recycled original GM parts. Remember, recycled parts will not be covered by your GM vehicle warranty.

Insurance pays the bill for the repair, but you must live with the repair. Depending on your policy limits, your insurance company may initially value the repair using aftermarket parts. Discuss this with your repair professional, and insist on Genuine GM parts. Remember if your vehicle is leased you may be obligated to have the vehicle repaired with Genuine GM parts, even if your insurance coverage does not pay the full cost.

If another party's insurance company is paying for the repairs, you are not obligated to accept a repair valuation based on that insurance company's collision policy repair limits, as you have no contractual limits with that company. In such cases, you can have control of the repair and parts choices as long as cost stays within reasonable limits.

## Reporting Safety Defects

### Reporting Safety Defects to the United States Government

If you believe that your vehicle has a defect which could cause a crash or could cause injury or death, you should immediately inform the National Highway Traffic Safety Administration (NHTSA), in addition to notifying General Motors.

If NHTSA receives similar complaints, it may open an investigation, and if it finds that a safety defect exists in a group of vehicles, it may order a recall and remedy campaign. However, NHTSA cannot become involved in individual problems between you, your dealer, or General Motors.

To contact NHTSA, you may call the Vehicle Safety Hotline toll-free at 1-888-327-4236 (TTY: 1-800-424-9153); go to http://www.safercar.gov; or write to:

Administrator, NHTSA
400 Seventh Street, SW.
Washington, D.C. 20590

You can also obtain other information about motor vehicle safety from http://www.safercar.gov.

## Reporting Safety Defects to the Canadian Government

If you live in Canada, and you believe that your vehicle has a safety defect, you should immediately notify Transport Canada, in addition to notifying General Motors of Canada Limited. You may call them at 1-800-333-0510 or write to:

Transport Canada
Road Safety Branch
2780 Sheffield Road
Ottawa, Ontario K1B 3V9

## Reporting Safety Defects to General Motors

In addition to notifying NHTSA (or Transport Canada) in a situation like this, we certainly hope you will notify General Motors. Please call the Chevrolet Customer Assistance Center at 1-800-222-1020, or write:

Chevrolet Motor Division
Chevrolet Customer Assistance Center
P.O. Box 33170
Detroit, MI 48232-5170

In Canada, please call us at 1-800-263-3777 (English) or 1-800-263-7854 (French). Or, write:

General Motors of Canada Limited
Customer Communication Centre, CA1-163-005
1908 Colonel Sam Drive
Oshawa, Ontario L1H 8P7

# Service Publications Ordering Information

## Service Manuals

Service Manuals have the diagnosis and repair information on engines, transmission, axle suspension, brakes, electrical, steering, body, etc.

## Transmission, Transaxle, Transfer Case Unit Repair Manual

This manual provides information on unit repair service procedures, adjustments, and specifications for GM transmissions, transaxles, and transfer cases.

## Service Bulletins

Service Bulletins give technical service information needed to knowledgeably service General Motors cars and trucks. Each bulletin contains instructions to assist in the diagnosis and service of your vehicle.

In Canada, the service bulletin reference number can be obtained by contacting your General Motors dealer or by calling 1-800-GM-DRIVE (1-800-463-7483). This reference number is needed to order the service bulletin from Helm, Inc.

RETAIL SELL PRICE: $6.00 US + Processing Fee

## Owner Information

Owner publications are written specifically for owners and intended to provide basic operational information about the vehicle. The owner manual will include the Maintenance Schedule for all models.

In-Portfolio: Includes a Portfolio, Owner Manual, and Warranty Booklet.

RETAIL SELL PRICE:
$35.00 US + Processing Fee

Without Portfolio: Owner's Manual only.

RETAIL SELL PRICE:
$25.00 US + Processing Fee

## Current and Past Model Order Forms

Technical Service Bulletins and Manuals are available for current and past model GM vehicles. To request an order form, please specify year and model name of the vehicle.

**ORDER TOLL FREE: 1-800-551-4123**
**Monday-Friday 8:00 AM - 6:00 PM**
**Eastern Time**

For Credit Card Orders Only (VISA-MasterCard-Discover), visit Helm, Inc. on the World Wide Web at: www.helminc.com

Or you can write to:

Helm, Incorporated
P.O. Box 07130
Detroit, MI 48207

Prices are subject to change without notice and without incurring obligation. Allow ample time for delivery.

Note to Canadian Customers: All listed prices are quoted in U.S. funds. Canadian residents are to make checks payable in U.S. funds.

# A


Accessories and Modifications ..... 264
Accessory Power Outlet(s) ..... 148
Adding Equipment to Your Airbag-Equipped
  Vehicle ..... 83
Additives, Fuel ..... 267
Add-On Electrical Equipment ..... 355
Air Cleaner/Filter, Engine ..... 281
Air Conditioning ..... 150
Airbag
  Passenger Status Indicator ..... 162
  Readiness Light ..... 161, 176
Airbag Sensing and Diagnostic
  Module (SDM) ..... 414
Airbag System ..... 68
  Adding Equipment to Your
    Airbag-Equipped Vehicle ..... 83
  How Does an Airbag Restrain? ..... 75
  Passenger Sensing System ..... 77
  Servicing Your Airbag-Equipped Vehicle ..... 82
  What Makes an Airbag Inflate? ..... 75
  What Will You See After an
    Airbag Inflates? ..... 76
  When Should an Airbag Inflate? ..... 73
  Where Are the Airbags? ..... 71
Airbag System (cont.)
AM-FM Radio ..... 188, 190
Antenna, Backglass ..... 218
Antenna, Fixed Mast ..... 218
Anti-Lock Brake System (ABS) ..... 225
Anti-Lock Brake, System
  Warning Light ..... 165, 180
Appearance Care
  Aluminum Wheels ..... 350
  Care of Safety Belts ..... 348
  Chemical Paint Spotting ..... 352
  Cleaning Exterior Lamps/Lenses ..... 349
  Cleaning the Inside of Your Vehicle ..... 345
  Fabric/Carpet ..... 346
  Finish Care ..... 349
  Finish Damage ..... 352
  Instrument Panel, Vinyl, and Other
    Plastic Surfaces ..... 348
  Leather ..... 347
  Sheet Metal Damage ..... 351
  Tires ..... 351
  Underbody Maintenance ..... 352
  Vehicle Care/Appearance Materials ..... 353
  Washing Your Vehicle ..... 349
  Weatherstrips ..... 348
  Windshield and Wiper Blades ..... 350

Appearance Care (cont.)
Ashtray(s) ..... 149
Audio System(s) ..... 186
AM-FM Radio ..... 188, 190
Audio Steering Wheel Controls ..... 216
Backglass Antenna ..... 218
Care of Your CD Player ..... 217
Care of Your CDs ..... 217
Fixed Mast Antenna ..... 218
Radio with CD ..... 194
Radio with Six-Disc CD ..... 201
Understanding Radio Reception ..... 217
Automatic Transaxle
Fluid ..... 283
Operation ..... 111

# B

Backglass Antenna ..... 218
Battery ..... 303
Inadvertent Power Battery Saver ..... 148
Before Leaving on a Long Trip ..... 239
Brake
Anti-Lock Brake System (ABS) ..... 225
Emergencies ..... 227
Brake (cont.)
Parking ..... 117
System Inspection ..... 395
System Warning Light ..... 164
Brakes ..... 299
Braking ..... 224
Braking in Emergencies ..... 227
Break-In, New Vehicle ..... 107
Bulb Replacement ..... 309
Center High-Mounted
Stoplamp (CHMSL) ..... 315
Front Turn Signal and
Parking Lamps ..... 312, 313
Halogen Bulbs ..... 309
Headlamp Aiming ..... 309
Headlamps ..... 310, 311
License Plate Lamps ..... 317
Replacement Bulbs ..... 317
Taillamps, Turn Signal, Stoplamps
and Back-up Lamps ..... 316
Turn Signal Lamps ..... 314
Buying New Tires ..... 330

# C


California Fuel ..... 267
California Proposition 65 Warning ..... 265
Canadian Owners ..... 3
Capacities and Specifications ..... 368
Carbon Monoxide ..... 98, 100, 122, 242, 259
Care of
  Safety Belts ..... 348
  Your CD Player ..... 217
  Your CDs ..... 217
CD, MP3 ..... 208, 212
Center High-Mounted
  Stoplamp (CHMSL) ..... 315
Center Rear Passenger Position,
  Safety Belts ..... 37
Chains, Tire ..... 335
Charging System Light ..... 164, 180
Check
  Engine Light ..... 168, 181
Checking Things Under the Hood ..... 273
Chemical Paint Spotting ..... 352
Child Restraints
  Child Restraint Systems ..... 45
  Infants and Young Children ..... 42
  Lower Anchors and Tethers for Children ..... 52
  Older Children ..... 39
Child Restraints (cont.)
  Securing a Child Restraint in a
    Rear Seat Position ..... 59
  Securing a Child Restraint in the
    Right Front Seat Position ..... 62
  Where to Put the Restraint ..... 50
Cigarette Lighter ..... 149
Cleaning
  Aluminum Wheels ..... 350
  Exterior Lamps/Lenses ..... 349
  Fabric/Carpet ..... 346
  Finish Care ..... 349
  Inside of Your Vehicle ..... 345
  Instrument Panel, Vinyl, and Other
    Plastic Surfaces ..... 348
  Leather ..... 347
  Tires ..... 351
  Underbody Maintenance ..... 352
  Washing Your Vehicle ..... 349
  Weatherstrips ..... 348
  Windshield and Wiper Blades ..... 350
Climate Control System ..... 150
  Air Filter, Passenger Compartment ..... 155
  Outlet Adjustment ..... 154
Clock ..... 150, 176
Clutch, Hydraulic ..... 286
Collision Damage Repair ..... 415

Compact Spare Tire ..... 344
Control of a Vehicle ..... 224
Coolant
  Engine Temperature Gage ..... 167
  Heater, Engine ..... 110
  Surge Tank Pressure Cap ..... 290
Cooling System ..... 292
Cruise Control ..... 141
Cruise Control Light ..... 172
Cupholder(s) ..... 127
Customer Assistance Information
  Courtesy Transportation ..... 411
  Customer Assistance for Text
    Telephone (TTY) Users ..... 406
  Customer Assistance Offices ..... 406
  Customer Satisfaction Procedure ..... 402
  GM Mobility Reimbursement Program ..... 407
  Reporting Safety Defects to
    General Motors ..... 420
  Reporting Safety Defects to the
    Canadian Government ..... 420
  Reporting Safety Defects to the
    United States Government ..... 419
  Roadside Assistance Program ..... 408
  Service Publications Ordering
    Information ..... 421

# D

Daytime Running Lamps ..... 146
Daytime Running Lamps Indicator Light ..... 172
Defensive Driving ..... 220
Disc, MP3 ..... 208, 212
Doing Your Own Service Work ..... 265
Dome Lamp ..... 148
Door
  Ajar Light ..... 173, 186
  Central Door Unlocking System ..... 95
  Door Ajar Reminder ..... 96
  Locks ..... 94
  Rear Door Security Locks ..... 96
Driver
  Position, Safety Belt ..... 25
  Seat Height Adjuster ..... 9
Driving
  At Night ..... 233
  City ..... 237
  Defensive ..... 220
  Drunken ..... 221
  Freeway ..... 238
  Hill and Mountain Roads ..... 240
  In Rain and on Wet Roads ..... 234
  Rocking Your Vehicle to Get it Out ..... 248
  Winter ..... 242

# E

Electrical System
Add-On Equipment ..... 355
Engine Compartment Fuse Block ..... 361
Fuses and Circuit Breakers ..... 356
Headlamp Wiring ..... 355
Instrument Panel Fuse Block ..... 357
Power Windows and Other
Power Options ..... 356
Windshield Wiper Fuses ..... 355
Engine
Air Cleaner/Filter ..... 281
Battery ..... 303
Check and Service Engine
Soon Light ..... 168, 181
Coolant ..... 287
Coolant Heater ..... 110
Coolant Temperature Gage ..... 167
Cooling System Inspection ..... 395
Drive Belt Routing ..... 370
Engine Compartment Overview ..... 276
Exhaust ..... 122
Oil ..... 277
Overheating ..... 290
Starting ..... 109
Event Data Recorders (EDR) ..... 414
Extender, Safety Belt ..... 38
Exterior Lamps ..... 145

# F

Filter
Engine Air Cleaner ..... 281
Finish Damage ..... 352
Fixed Mast Antenna ..... 218
Flashers, Hazard Warning ..... 135
Flash-to-Pass ..... 138
Flat Tire ..... 335
Flat Tire, Changing ..... 336
Flat Tire, Storing ..... 344
Fluid
Automatic Transaxle ..... 283
Manual Transaxle ..... 285
Power Steering ..... 297
Windshield Washer ..... 298
Fog Lamp Light ..... 172, 186
Fog Lamps ..... 147
Fuel ..... 266
Additives ..... 267
California Fuel ..... 267
Filling a Portable Fuel Container ..... 272

Fuel (cont.)
Filling Your Tank ..... 269
Fuels in Foreign Countries ..... 268
Gage ..... 173
Gasoline Octane ..... 266
Gasoline Specifications ..... 266
Low Warning Light ..... 174
System Inspection ..... 395
Fuses
Engine Compartment Fuse Block ..... 361
Fuses and Circuit Breakers ..... 356
Instrument Panel Fuse Block ..... 357
Windshield Wiper ..... 355

# G

Gage
Engine Coolant Temperature ..... 167
Fuel ..... 173
Speedometer ..... 160
Tachometer ..... 160
Gasoline
Octane ..... 266
Specifications ..... 266
Glove Box ..... 127
GM Mobility Reimbursement Program ..... 407

# H

Hazard Warning Flashers ..... 135
Head Restraints ..... 12
Headlamp
Aiming ..... 309
Headlamp Wiring ..... 355
Headlamps ..... 310, 311
Bulb Replacement ..... 309
Daytime Running Lamps ..... 146
Flash-to-Pass ..... 138
Front Turn Signal and
Parking Lamps ..... 312, 313
Halogen Bulbs ..... 309
High/Low Beam Changer ..... 138
On Reminder ..... 145
Turn Signal Lamps ..... 314
Heater ..... 150
Height Adjuster, Driver Seat ..... 9
Highbeam On Light ..... 172
Highway Hypnosis ..... 240
Hill and Mountain Roads ..... 240
Hold Mode Light ..... 166, 181
Hood
Checking Things Under ..... 273
Release ..... 274

Horn ..... 136
How to Use This Manual ..... 4
How to Wear Safety Belts Properly ..... 24
Hydraulic Clutch ..... 286

# I

Ignition Positions ..... 108
Immobilizer ..... 106
Immobilizer Operation ..... 106
Infants and Young Children, Restraints ..... 42
Inflation - Tire Pressure ..... 326
Inspection
  Brake System ..... 395
  Engine Cooling System ..... 395
  Exhaust System ..... 394
  Fuel System ..... 395
  Part C - Periodic Maintenance ..... 394
  Steering, Suspension and Front Drive
    Axle Boot and Seal ..... 394
Instrument Panel
  Overview ..... 132
Instrument Panel (I/P)
  Brightness ..... 147
  Cluster ..... 158

# J

Jump Starting ..... 304

# K

Keyless Entry System ..... 90
Keys ..... 88

# L

Labeling, Tire Sidewall ..... 320
Lamps
  Dome ..... 148
  Exterior ..... 145
  Fog ..... 147
  Inadvertent Power Battery Saver ..... 148
LATCH System
  Child Restraints ..... 52
License Plate Lamps ..... 317
Liftgate ..... 100
Light
  Airbag Readiness ..... 161, 176
  Anti-Lock Brake System Warning ..... 165, 180
  Brake System Warning ..... 164

Light (cont.)
Charging System ..... 164, 180
Cruise Control ..... 172
Daytime Running Lamps Indicator ..... 172
Door Ajar ..... 173, 186
Fog Lamp ..... 172, 186
Highbeam On ..... 172
Hold Mode ..... 166, 181
Low Fuel Warning ..... 174
Malfunction Indicator ..... 168, 181
Oil Pressure ..... 171, 185
Passenger Airbag Status Indicator ..... 162
Passenger Airbag Status Indicator (Hatchback) ..... 178
Safety Belt Reminder ..... 161, 176
Safety Belt Reminder Tone ..... 161
Loading Your Vehicle ..... 248
Lockout Protection ..... 97
Locks
Central Door Unlocking System ..... 95
Door ..... 94
Lockout Protection ..... 97
Rear Door Security Locks ..... 96
Long Trip/Highway Scheduled Maintenance ..... 384
Loss of Control ..... 232
Low Fuel Warning Light ..... 174
Lumbar
Manual Controls ..... 9

# M

Maintenance, Normal Replacement Parts ..... 369
Maintenance Schedule
At Each Fuel Fill ..... 389
At Least Once a Month ..... 389
At Least Once a Year ..... 390
At Least Twice a Year ..... 389
Brake System Inspection ..... 395
Engine Cooling System Inspection ..... 395
Exhaust System Inspection ..... 394
Fuel System Inspection ..... 395
How This Section is Organized ..... 373
Introduction ..... 372
Long Trip/Highway Scheduled Maintenance ..... 384
Maintenance Requirements ..... 372
Part A - Scheduled Maintenance Services ..... 374
Part B - Owner Checks and Services ..... 389
Part C - Periodic Maintenance Inspections ..... 394

Maintenance Schedule (cont.)
Part D - Recommended Fluids and Lubricants ..... 396
Part E - Maintenance Record ..... 398
Selecting the Right Schedule ..... 375
Short Trip/City Scheduled Maintenance ..... 377
Steering, Suspension and Front Drive Axle Boot and Seal Inspection ..... 394
Using ..... 374
Your Vehicle and the Environment ..... 372
Malfunction Indicator Light ..... 168, 181
Manual Lumbar Controls ..... 9
Manual Seats ..... 8
Manual Transaxle
Fluid ..... 285
Operation ..... 115
Manual Windows ..... 102
Mirrors
Manual Rearview Mirror ..... 124
Outside Convex Mirror ..... 126
Outside Heated Mirrors ..... 126
Outside Manual Mirrors ..... 124
Outside Power Mirror ..... 125
MP3 ..... 208, 212
MyGMLink.com ..... 405

# N

New Vehicle Break-In ..... 107
Normal Maintenance Replacement Parts ..... 369

# O

Odometer ..... 160
Odometer, Trip ..... 160
Off-Road Recovery ..... 230
Oil
Engine ..... 277
Pressure Light ..... 171, 185
Older Children, Restraints ..... 39
Online Owner Center ..... 405
Other Warning Devices ..... 136
Outlet Adjustment ..... 154
Outlet(s), Accessory Power ..... 148
Outside
Convex Mirror ..... 126
Heated Mirrors ..... 126
Manual Mirrors ..... 124
Power Mirror ..... 125
Owners, Canadian ..... 3

# P


Paint, Damage ..... 352
Park (P)
  Shifting Into ..... 118
  Shifting Out of ..... 119
Parking
  Brake ..... 117
  Over Things That Burn ..... 121
Parking Your Vehicle ..... 120
Part A - Scheduled Maintenance
  Services ..... 374
Part B - Owner Checks and Services ..... 389
Part C - Periodic Maintenance
  Inspections ..... 394
Part D - Recommended Fluids and
  Lubricants ..... 396
Part E - Maintenance Record ..... 398
Passenger Airbag Status Indicator ..... 162
Passenger Airbag Status Indicator
  (Hatchback) ..... 178
Passenger Compartment Air Filter ..... 155
Passenger Sensing System ..... 77
Passing ..... 230
Power
  Accessory Outlet(s) ..... 148
  Electrical System ..... 356
  Steering Fluid ..... 297
  Windows ..... 102
Pretensioners, Safety Belt ..... 38


# Q


Questions and Answers About Safety Belts ..... 23


# R


Radios ..... 186
  AM-FM Radio ..... 188, 190
  Care of Your CD Player ..... 217
  Care of Your CDs ..... 217
  Radio with CD ..... 194
  Radio with Six-Disc CD ..... 201
  Understanding Reception ..... 217
Rear Door Security Locks ..... 96
Rear Seat Operation ..... 13, 15
Rear Seat Passengers, Safety Belts ..... 34
Rear Windshield Washer/Wiper ..... 140

Rearview Mirrors ..... 124
Reclining Seatbacks ..... 10
Recreational Vehicle Towing ..... 257
Remote Keyless Entry System ..... 90
Remote Keyless Entry System, Operation ..... 91
Removing the Flat Tire and Installing
the Spare Tire ..... 339
Removing the Spare Tire and Tools ..... 337
Replacement Bulbs ..... 317
Reporting Safety Defects
Canadian Government ..... 420
General Motors ..... 420
United States Government ..... 419
Restraint System Check
Checking the Restraint Systems ..... 84
Replacing Restraint System Parts
After a Crash ..... 84
Right Front Passenger Position,
Safety Belts ..... 33
Roadside
Assistance Program ..... 408
Rocking Your Vehicle to Get it Out ..... 248
Routing, Engine Drive Belt ..... 370
Running the Engine While Parked ..... 122

# S

Safety Belt
Pretensioners ..... 38
Reminder Light ..... 161, 176
Reminder Tone ..... 161
Safety Belts
Care of ..... 348
Center Rear Passenger Position ..... 37
Driver Position ..... 25
How to Wear Safety Belts Properly ..... 24
Questions and Answers About
Safety Belts ..... 23
Rear Seat Passengers ..... 34
Right Front Passenger Position ..... 33
Safety Belt Extender ..... 38
Safety Belt Use During Pregnancy ..... 33
Safety Belts Are for Everyone ..... 19
Shoulder Belt Height Adjuster ..... 32
Safety Warnings and Symbols ..... 4
Seats
Driver Seat Height Adjuster ..... 9
Head Restraints ..... 12
Manual ..... 8

Seats (cont.)
Manual Lumbar ..... 9
Rear Seat Operation ..... 13, 15
Reclining Seatbacks ..... 10
Secondary Information Center (SIC) ..... 175
Securing a Child Restraint
Rear Seat Position ..... 59
Right Front Seat Position ..... 62
Selecting the Right Schedule,
Maintenance ..... 375
Service ..... 264
Accessories and Modifications ..... 264
Adding Equipment to the Outside
of Your Vehicle ..... 266
California Proposition 65 Warning ..... 265
Doing Your Own Work ..... 265
Engine Soon Light ..... 168, 181
Publications Ordering Information ..... 421
Servicing Your Airbag-Equipped Vehicle ..... 82
Sheet Metal Damage ..... 351
Shifting Into Park (P) ..... 118
Shifting Out of Park (P) ..... 119
Short Trip/City Scheduled Maintenance ..... 377
Shoulder Belt Height Adjuster ..... 32
Signals, Turn and Lane-Change ..... 137
Spare Tire
Compact ..... 344
Installing ..... 339
Removing ..... 337
Storing ..... 344
Specifications, Capacities ..... 368
Speedometer ..... 160
Starting Your Engine ..... 109
Steering ..... 227
Steering, Suspension and Front Drive
Axle Boot and Seal Inspection ..... 394
Steering Wheel Controls, Audio ..... 216
Steering Wheel, Tilt Wheel ..... 136
Storage Areas ..... 126
Cupholder(s) ..... 127
Glove Box ..... 127
Sunglasses Storage Compartment ..... 127
Stuck in Sand, Mud, Ice, or Snow ..... 247
Sun Visors ..... 103
Sunroof ..... 128

# T


Tachometer ..... 160
Taillamps
  Turn Signal, Stoplamps and Back-up Lamps ..... 316
Theft-Deterrent System ..... 103
Theft-Deterrent Systems ..... 103
  Immobilizer ..... 106
  Immobilizer Operation ..... 106
Tilt Wheel ..... 136
Time ..... 150
Tires ..... 319
  Aluminum Wheels, Cleaning ..... 350
  Buying New Tires ..... 330
  Chains ..... 335
  Changing a Flat Tire ..... 336
  Cleaning ..... 351
  Compact Spare Tire ..... 344
  Different Size ..... 331
  If a Tire Goes Flat ..... 335
  Inflation - Tire Pressure ..... 326
  Inspection and Rotation ..... 327
  Installing the Spare Tire ..... 339
  Removing the Flat Tire ..... 339
  Removing the Spare Tire and Tools ..... 337
Tires (cont.)
  Storing a Flat or Spare Tire and Tools ..... 344
  Tire Sidewall Labeling ..... 320
  Tire Terminology and Definitions ..... 323
  Uniform Tire Quality Grading ..... 332
  Wheel Alignment and Tire Balance ..... 333
  Wheel Replacement ..... 333
  When It Is Time for New Tires ..... 329
Towing
  Recreational Vehicle ..... 257
  Towing a Trailer ..... 259
  Your Vehicle ..... 257
Transaxle
  Fluid, Automatic ..... 283
  Fluid, Manual ..... 285
Transaxle Operation, Automatic ..... 111
Transaxle Operation, Manual ..... 115
Trip Odometer ..... 160
Trunk ..... 98
Turn and Lane-Change Signals ..... 137
Turn Signal/Multifunction Lever ..... 137


# U


Understanding Radio Reception ..... 217
Uniform Tire Quality Grading ..... 332

# V

Vehicle
Control ..... 224
Damage Warnings ..... 5
Loading ..... 248
Parking Your ..... 120
Symbols ..... 5
Vehicle Data Collection and Event Data Recorders ..... 414
Vehicle Identification Number (VIN) ..... 354
Service Parts Identification Label ..... 354
Ventilation Adjustment ..... 154
Visors ..... 103

# W

Warning Lights, Gages and Indicators ..... 157
Warnings
Hazard Warning Flashers ..... 135
Other Warning Devices ..... 136
Safety and Symbols ..... 4
Vehicle Damage ..... 5
Wheels
Alignment and Tire Balance ..... 333
Different Size ..... 331
Replacement ..... 333
Where to Put the Restraint ..... 50
Windows ..... 101
Manual ..... 102
Power ..... 102
Windshield
Washer ..... 140
Washer Fluid ..... 298
Wiper Blade Replacement ..... 318
Wiper Blades, Cleaning ..... 350
Wiper Fuses ..... 355
Wipers ..... 138
Windshield, Rear Washer/Wiper ..... 140
Winter Driving ..... 242

# Y

Your Vehicle and the Environment ..... 372